TOSHIBA

FILE NO. 020-200032

SERVICE MANUAL

COLOR TELEVISION

N0PSP Chassis

56H80, 40H80

(TAC0072) (TAC0073)

PUBLISHED IN JAPAN, Sep., 2000 (So)

TABLE OF CONTENTS

CHAPTER 1 **GENERAL ADJUSTMENTS**

SAFETY INSTRUCTIONS 3
CRT ASSEMBLY REPLACEMENT AND MOUNTING 4
PICTURE TUBE COMPONENTS ADJUSTMENT 6
REPLACEMENT OF THE CRT 9
SERVICE MODE 10
ELECTRICAL ADJUSTMENT 12
CONVERGENCE ADJUSTMENT 14
SCREEN AND MIRROR ALIGNMENTS 21
CIRCUIT CHECKS 22

CHAPTER 2 **SPECIFIC INFORMATIONS**

SETTING & ADJUSTING DATA 23
LOCATION OF CONTROLS 24
PROGRAMMING CHANNEL MEMORY 26
CIRCUIT BLOCK DIAGRAM 27
MECHANICAL DISASSEMBLY 29
CHASSIS REPLACEMENT PARTS LIST 32
PC BOARDS BOTTOM VIEW ..... ??
TERMINAL VIEW OF TRANSISTORS ..... ??
SPECIFICATIONS ..... ??
APPENDIX:
CIRCUIT DIAGRAM

CHAPTER 1 GENERAL ADJUSTMENTS

SAFETY INSTRUCTIONS

WARNING: BEFORE SERVICING THIS CHASSIS, READ THE "X-RAY RADIATION PRECAUTION", "SAFETY PRECAUTION" AND "PRODUCT SAFETY NOTICE" INSTRUCTIONS BELOW.

X-RAY RADIATION PRECAUTION

1. Excessive high voltage can produce potentially hazardous X-RAY RADIATION. To avoid such hazards, the high voltage must not be above the specified limit. The nominal value of the high voltage of this receiver is (A) kV at zero beam current (minimum brightness) under a 120V AC power source. The high voltage must not, under any circumstances, exceed (B) kV.

   Refer to table-1 for high voltage (A), (B).
   (See SETTING & ADJUSTING DATA on page 23)

   Each time a receiver requires servicing, the high voltage should be checked following the HIGH VOLTAGE CHECK procedure in this manual. It is recommended that the reading of the high voltage be recorded as a part of the service record. It is important to use an accurate and reliable high voltage meter.
2. This receiver is equipped with a Fail Safe (FS) circuit which prevents the receiver from producing an excessively high voltage even if the B+ voltage increases abnormally. Each time the receiver is serviced, the FS circuit must be checked to determine that the circuit is properly functioning, following the FS CIRCUIT CHECK procedure in this manual.
3. The only source of X-RAY RADIATION in this TV receiver is the picture tube. For continued X-RAY RADIATION protection, the replacement tube must be exactly the same type tube as specified in the parts list.
4. Some part in this receiver have special safety-related characteristics for X-RAY RADIATION protection. For continued safety, parts replacement should be undertaken only after referring to the PRODUCT SAFETY NOTICE below.

SAFETY PRECAUTION

WARNING : Service should not be attempted by anyone unfamiliar with the necessary precautions on this receiver. The following are the necessary precautions to be observed before servicing this chassis.

1. An isolation Transformer should be connected in the power line between the receiver and the AC line before any service is performed on the receiver.
2. Always discharge the picture tube anode to the CRT conductive coating before handling the picture tube. The picture tube is highly evacuated and if broken, glass fragments will be violently expelled. Use shatter proof goggles and keep picture tube away from the unprotected body while handling.
3. When replacing a chassis in the cabinet, always be certain that all the protective devices are put back in place, such as; non-metallic control knobs, insulating covers, shields, isolation resistor-capacitor network etc.
4. Before returning the set to the customer, always perform an AC leakage current check on the exposed metallic parts of the cabinet, such as antennas, terminals, screwheads, metal overlays, control shafts etc. to be sure the set is safe to operate without danger of electrical shock. Plug the AC line cord directly into a 120V AC outlet (do not use a line isolation transformer during this check). Use an AC voltmeter having 5000 ohms per volt or more sensitivity in the following manner:

   Connect a 1500 ohm 10 watt resistor, paralleled by a 0.15 μF, AC type capacitor, between a known good earth ground (water pipe, conduit, etc.) and the exposed metallic parts, one at a time. Measure the AC voltage across the combination of 1500 ohm resistor and 0.15 μF capacitor. Reverse the AC plug at the AC outlet and repeat AC voltage measurements for each exposed metallic part. Voltage measured must not exceed 0.3 volts rms. This corresponds to 0.2 milliamp. AC. Any value exceeding this limit constitutes a potential shock hazard and must be corrected immediately.

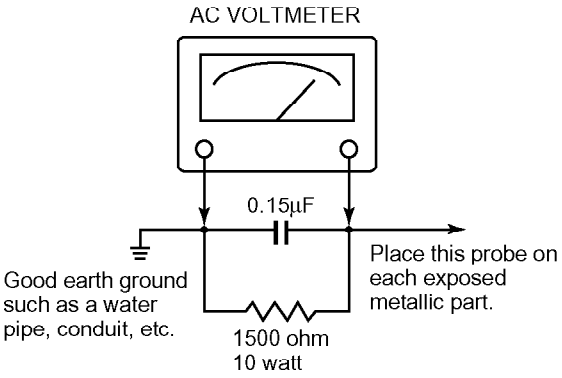

PRODUCT SAFETY NOTICE

Many electrical and mechanical parts in this chassis have special safety-related characteristics. These characteristics are often passed unnoticed by a visual inspection and the protection afforded by them cannot necessarily be obtained by using replacement components rated for higher voltage, wattage, etc. Replacement parts which have these special safety characteristics are identified in this manual and its supplements; electrical components having such features are identified by the international hazard symbols on the schematic diagram and the parts list.
Before replacing any of these components, read the parts list in this manual carefully. The use of substitute replacement parts which do not have the same safety characteristics as specified in the parts list may create shock, fire, X-ray radiation or other hazards.

CRT ASSEMBLY REPLACEMENT AND MOUNTING

CAUTION : DO NOT LOOSEN THE HEX HEAD BOLTS WITH SPRINGS (12 PCS), BECAUSE THOSE ARE FOR SEALING OF CRT COOLANT.

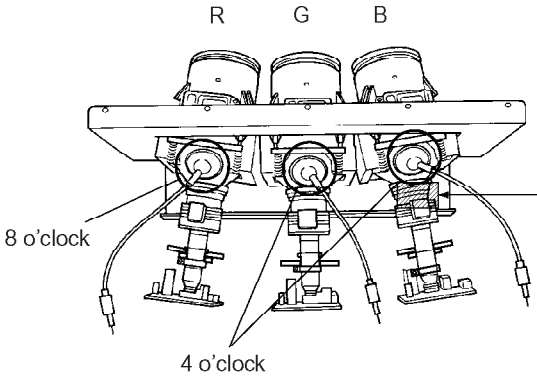

Attention Serviceman

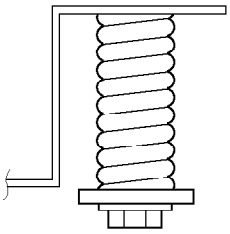

The Hex Head Bolts with Springs. (see sketch) used on CRT assembly, are "NOT" Adjustment Screws DO NOT LOOSEN-FLUID LEAKAGE WILL OCCUR.

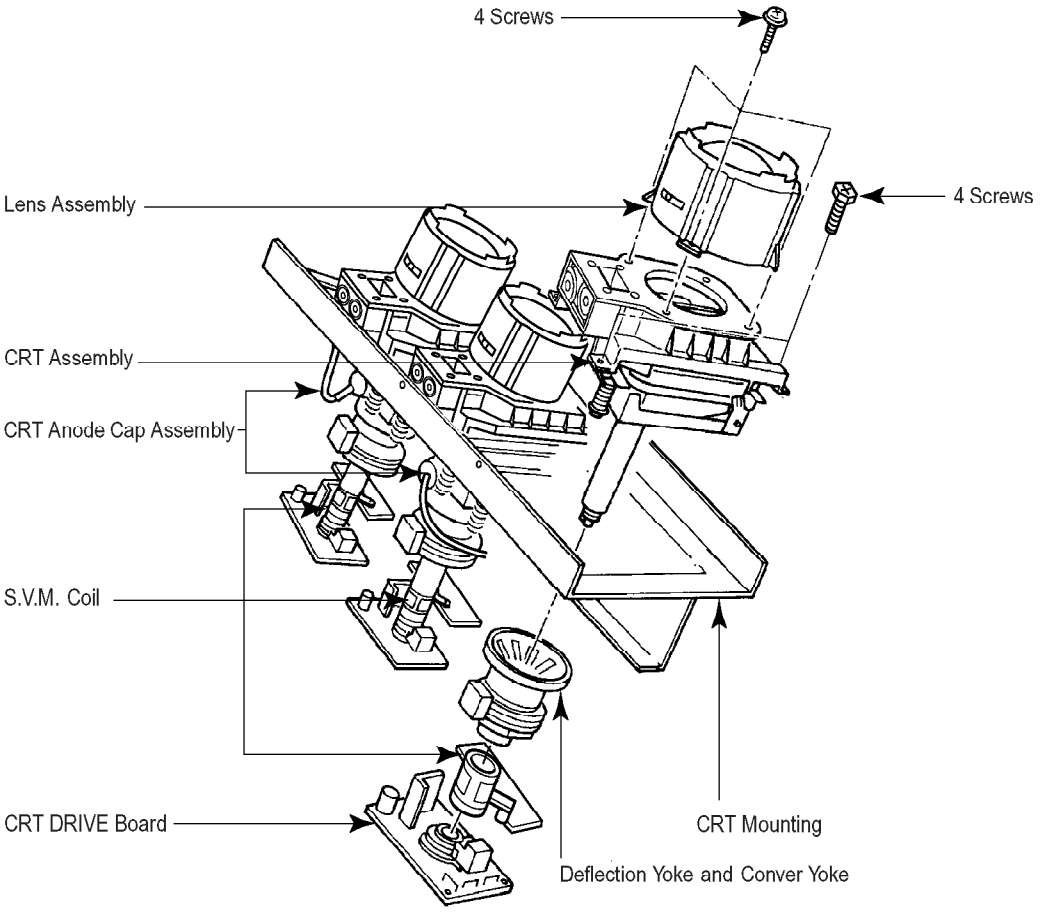

Lens and Neck Components View

TO REMOVE CRT (Same procedure for R, G, B)

1. Remove CRT DRIVE Board, S. V. M. COIL and DEF. YOKE from CRT.
2. Remove Lens Assembly.
3. Detach CRT Anode Cap from CRT.
4. Remove CRT Assembly from CRT Mounting.

CRT REPLACEMENT (Same procedure for R, G, B)

Reverse the removal procedures except the followings.

1. Anode Cable should be replaced with new one. See "SERVICING PRECAUTIONS" shown below.
2. Install silicon (T461B) to the CRT, replace the Anode cable and put enough silicon again on around the Anode Cap as illustrated.

CAUTION: Align the Anode cable as illustrated on page 4.

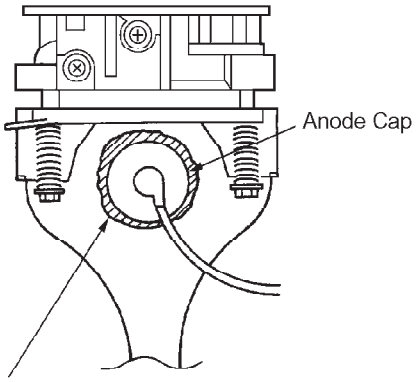

ADJUSTING PROCEDURE IN REPLACING CRT

1. R.G.B. FOCUS ADJUSTMENT (page 7.)
2. PICTURE TILT ADJUSTMENT (page 7.)
3. USER CONVERGENCE CENTER CHECK (See owner's manual.)
4. CENTERING ADJUSTMENT (page 7.)
5. CONVERGENCE ADJUSTMENT (page 14.)
6. WHITE BALANCE ADJUSTMENT (page 13.)

Adjustments are complete.

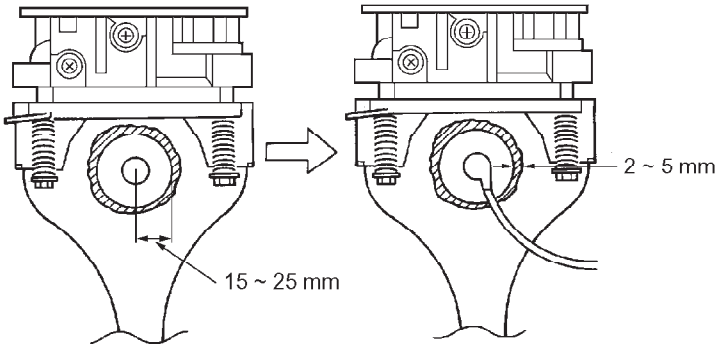

SERVICING PRECAUTIONS

■ Do not use a magnetized screw driver for screws of Deflection Yoke and Velocity Modulation Coil to avoid magnetization of electron gun. Magnetization of electron gun will degrade basic function and result in unbalance of right and left shift of user static convergence, and result in no variable quantity.

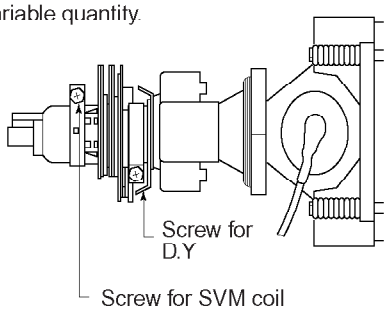

■ When replacing the anode cap assembly (CRT) or anode lead assembly (F.B.T.), remove the anode lead holder from old one and attach the holder again to new anode lead.

■ Check the point of anode lead in a straight line, if it is winding, please revise it.

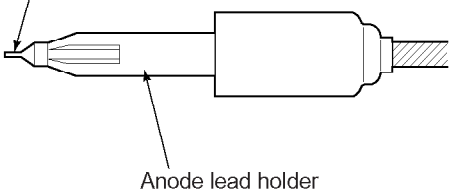

WARNING : BEFORE SERVICING THIS CHASSIS, READ THE "X-RAY RADIATION PRECAUTION", "SAFETY PRECAUTION" AND "PRODUCT SAFETY NOTICE" ON PAGE 3 OF THIS MANUAL.

PICTURE TUBE COMPONENTS ADJUSTMENT

DESCRIPTION OF NECK COMPONENTS

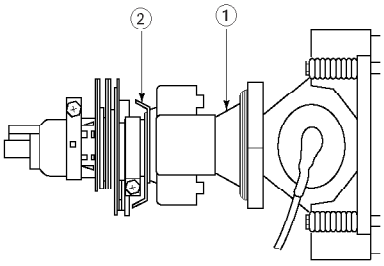

① Deflection yoke and convergence yoke
The position on the neck is required most front (CRT funnel side) and the screw is fastened after rotating yoke adjusting picture tilt.

② Centering magnet
After adjusting picture tilt, picture position is finally fixed by this magnet.
In order to get maximum margin of user convergence control for center of screen, this magnet have to be used for center convergence adjustment.

PREPARATION
Operate the receiver for at least 5 minutes.

RGB ALIGNMENT ADJUSTMENT (ONLY 56H80)

1. Set the knobs of the pole 2, 4, 6 magnets of the SVM coil so that their magnetic fields override each other.

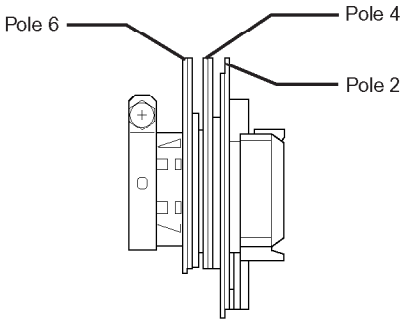

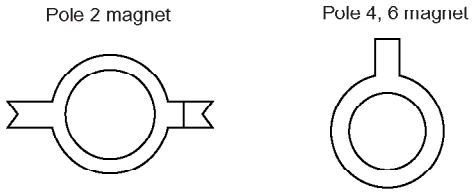

2. Select adjustment mode (see page 10).
3. Adjust the centering magnets for the RED, GREEN and BLUE colors. (See CENTERING ADJUSTMENT.)
4. Press "7" button to display the built-in cross-hatch.
5. Press "0" and "RTN" buttons to make the picture a single Red color.
   100 button ..... to erase Red color
   0 button ..... to erase Green color
   RTN button ..... to erase Blue color5.
6. Adjust the alignment of the projection tube for RED. (See steps (1) to (3) below.

   (1) Slightly turn the focus VR of RED to the left.
   (2) Adjust the pole 2 magnet so that the bright section of the cross hatch on the center of the dark section (flare).

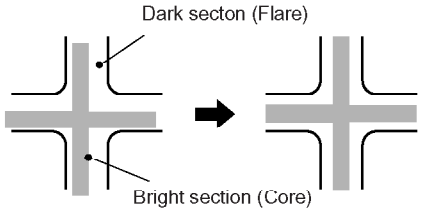

   (3) Readjust the centering magnets for the LED colors.
   (4) Reconfirm that the alignment, and centering are correct. If necessary, repeat the steps (1) to (3) above to adjust appropriately.

7. Adjust the electric focus of RED as well as possible. (See RGB FOCUS ADJUSTMENT.)
8. Adjust the alignment of GREEN and BLUE using the above procedure for adjusting RED.

R, G, B FOCUS ADJUSTMENT

1. Before adjusting the R, G, B FOCUS, remove the 4 screws of Lens Assembly which is fixed on the CRT Assembly. (See page 4.)
   Then turn around the Lens Assembly by 180° to adjust the fastening screw (Fig. a) and fasten the 4 screws to secure Lens Assembly.
2. Select the adjustment mode. (See page 10.)
3. Press "7" button to display the built-in cross-hatch.
4. Press "0" and "RTN" buttons to make the picture a single Red color.
   100 button ..... to erase Red color
   0 button ..... to erase Green color
   RTN button ..... to erase Blue color5.
5. Loosen the fasten screw and adjust Red lense focus to best focusing point of picture center. Then fasten the screw. (See Fig. a.)

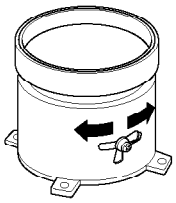

Fig. a

6. Adjust FOCUS VR "R" of FOCUS PACK to find best focusing point of picture center.
7. Repeat steps 3 to 5 for Green and Blue colors.

TILT ADJUSTMENT

Rotate R, G, B deflection yoke so that picture becomes horizon, then fasten screw.

CENTERING ADJUSTMENT

1. Stretch a thread between two center of screen edge (top and bottom, left and right).

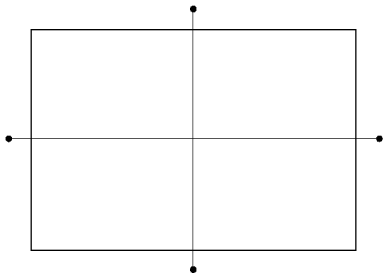

2. Select the adjustment mode.
3. Press TV/VIDEO button on the Remote Control to display the white cross-bar.

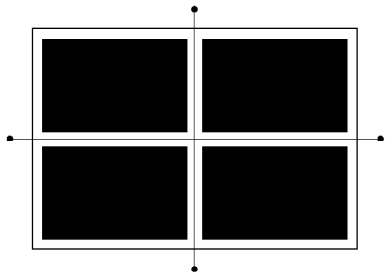

4. Perform VCEN adjustment. (See page 12.)
5. Adjust G centering magnet so that the cross-bar pattern center comes to screen center.
6. Perform HEIGHT adjustment . (See page 13.)
7. Perform VERT. LINEARITY adjustment.
8. Perform WIDTH adjustment. (See page 13.)
9. Check whole quality of green line.
10. Adjust R, B centering magnet so that the cross-bar pattern center comes to screen center.

LOCATION OF SCREEN AND FOCUS VR'S

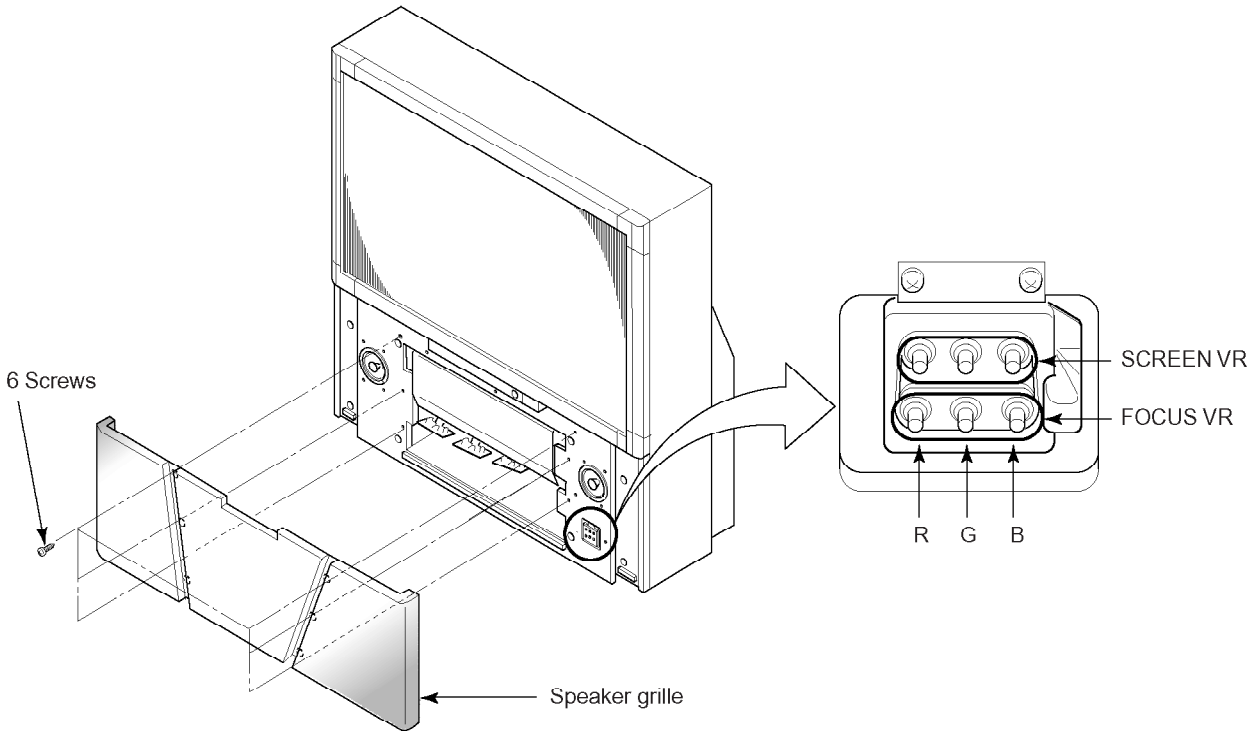

REPLACEMENT OF THE CRT

Service parts are provided for each R, G and B.
The contents of the parts are as follows.

		R	G	B
HITACHI	40H80	23007004	23007005	23003520
CRT	56H80	23005540	23005541	23003818

REPLACEMENT OF HIGH VOLTAGE CABLE

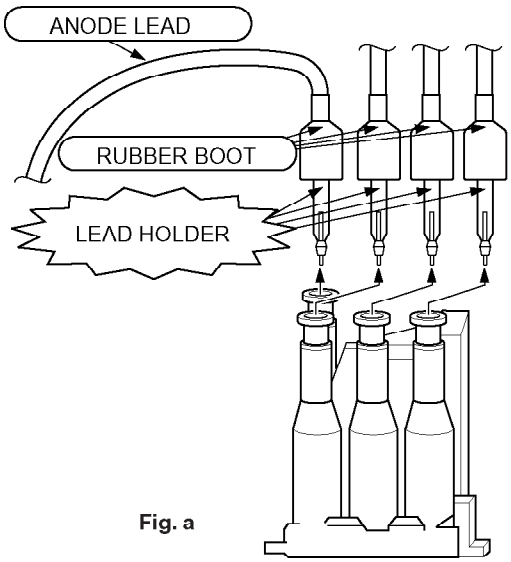

Fig. a

Z450 TPA5007

1. When replacing Anode Lead or Anode Cap with new one, remove Lead Holder from old lead as shown in figure below, and put it on new lead. Do not throw away Lead Holder.

NOTE : THE LEAD HOLDER IS ATTACHED TO TPA5007 (Z450), BUT IS NOT ATTACHED TO ANODE LEAD AND ANODE CAP. RUBBER BOOT IS ATTACHED TO ANODE LEAD AND ANODE CAP.

2. Detaching Lead Holder

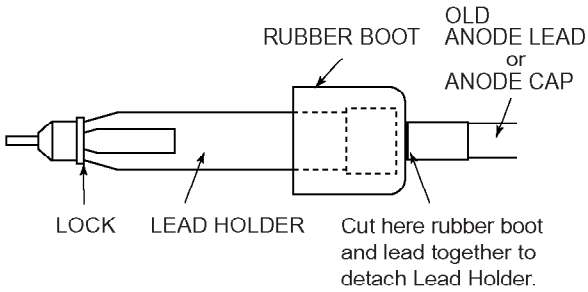

Fig. b

SERVICE MODE

1. ENTERING TO SERVICE MODE

1) Press MUTE button once on Remote Control.
2) Press MUTE button again to keep pressing.
3) While pressing the MUTE button, press MENU button on TV set.

(Service mode display)

2. DISPLAYING THE ADJUSTMENT MENU

1) Press MENU button on TV.

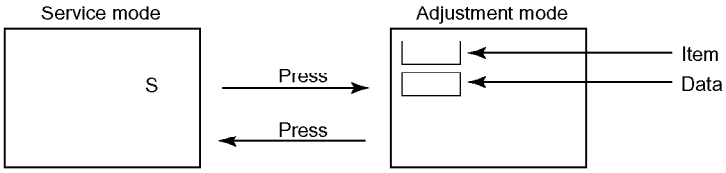

3. KEY FUNCTION IN THE SERVICE MODE

The following key entry during display of adjustment menu provides special functions.

Screen adjustment mode ON/OFF:	TV (ANT)/VIDEO button (on TV)
Selection of the adjustment items :	Channel ▲/▼ (on TV or Remote)
Change of the data value :	Volume ▲/▼ (on TV or Remote)
Adjustment menu mode ON/OFF :	MENU button (on TV)
Initialization of the memory (QA02) :	RECALL+Channel button on TV (▲)
Initialization of the self diagnostic data:	RECALL+Channel button on TV (▼)
"RCUT" selection :	1 button
"GCUT" selection :	2 button
"BCUT" selection :	3 button
"SCNT" selection :	4 button
"SCOL" selection :	5 button
"TNTC" selection :	6 button
Convergence adj :	7 button
Test audio signal ON/OFF (1kHz) :	8 button
Self diagnostic display :	9 button

4. SELECTING THE ADJUSTING ITEMS

1) Every pressing of CHANNEL ▲ button in the service mode changes the adjustment items in the order of table-2. (▼ button for reverse order)

Refer to table-2 for preset data of adjustment mode.
(See SETTING & ADJUSTING DATA on page 23)

5. ADJUSTING THE DATA

1) Pressing of VOLUME ▲ or ▼ button will cahnge the value of data in the range from 00H to FFH. The variable range depends on the adjusting item.

6. EXIT FROM SERVICE MODE

1) Pressing POWER button to turn off the TV once.

■ INITIALIZATION OF MEMORY DATA OF QA02

After replacing QA02, the following initialization is required.

1. Enter the service mode, then select any register item.
2. Press and hold the RECALL button on the Remote, then press the CHANNEL ▲ button on the TV. The initialization of QA02 has been complated.
3. Check the picture carefully. If necessary, adjust any adjustment item above.
   Perform "Programming Channel Memory" on the owner's manual.

CAUTION: Never attempt to initialize the data unless QA02 has been replaced.

7. SELF DIAGNOSTIC FUNCTION

1) Press "9" button on Remote Control during display of adjustment menu in the service mode.
   The diagnosis will begin to check if interface among IC's are executed properly.
2) During diagnosis, the following displays are shown.

```
   SELF CHECK
① NO. 23 * * * * * *
② POWER     : 000
③ BUS LINE  : OK
④ BUS CONT : OK
⑤ BLOCK : MAIN  SUB
```

① Part number of microprocessor (QA01)
② Operation number of protection circuit (current limiter) . . . . "000" is normal.
③ BUS line check
- "OK" ..... Normal
- "SCL-GND" or "NG" ..... SCL-GND short circuit
- "SDA-GND" or "NG" ..... SDA-GND short circuit
- "SCL-SDA" or "NG" ..... SCL-SDA short circuit

④ BUS line ACK (acknowledge) check
- "OK" ..... Normal
- Display of Location Number . . . . NG
- (Display example)
- "QA02 NG", "H001 NG", "Q501 NG" etc.
- Note: The indication of failure place is only one place though failure places are plural. When repair of a failure place finishes, the next failure place is indicated. (The order of priority of indication is left side.)

⑤ Sync. signal check
- Green display ..... Normal
- Red display ..... NG
  - MAIN ..... Main sync
  - SUB ..... Sub sync (when turn on the PIP)

ELECTRICAL ADJUSTMENT

ITEM	ADJUSTMENT PROCEDURE
ƒH (free-running frequency of Hor. oscillator)	1. Receive NTSC signal. 2. Short the terminal "TP +9V" and the terminal " TP (Free run) " on the signal board with a jumper wire. 3. Connect the probe of frequency counter to the lead of R426 and GND. 4. Adjust the frequency to "31.47±0.2 kHz" by turning R4055. 5. Disconnect the shorted wire, then confirm that the picture is synchronized.
VERTICAL POSITION (VCEN)	1. Receive NTSC signal. 2. Call up the adjustment mode display, then select the item VCEN. 3. Press the VOLUME ▲ or ▼ button to get the voltage 0±10 mV. 4. Measuring terminals are TP-V and TP-G on SIGNAL Board.
SUB-BRIGHTNESS (BRTC)	1. Constrict the picture height until the vertical retrace line appears adjusting the HEIGHT control on the MAIN board. 2. Adjust the CONTRAST to the minimum and BRIGHTNESS to the center. 3. Enter the service mode, then select "**BRTC**" register. 4. Adjust the data value so the belt of vertical retrace line just disappear. 5. Adjust the CONTRAST for the desired contrast. 6. Adjust the HEIGHT control. 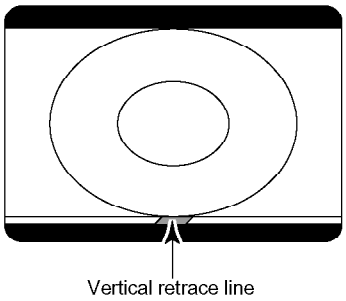
SUB-COLOR (SCOL) SUB-TINT (TNTC)	1. Receive color-bar signal from color-bar generator. 2. Adjust the BRIGHTNESS and CONTRAST to the center (RESET status). 3. Connect oscilloscope to TP501on the MAIN board. 4. Enter the service mode, then select "**SCOL**". 5. Temporarily adjust the data value to achieve about $1V_{0\text{-}p}$ of blue bar. 6. Select "**TNTC**" register. 7. Adjust the data value to obtain the blue bar to magenta bar ratio of 3:2 as shown. 8. Select "**SCOL**" register. 9. Adjust the data value to achieve $1.8V_{0\text{-}p}$ of blue bar on scope. 10. Check the picture with off-air signal. 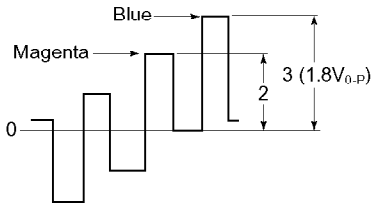
PICTURE POSITION (HPOS)	1. Receive NTSC signal. 2. Call up the adjustment mode display. 3. Select the item "HPOS", and adjust the data to "66H". 4. Adjust the picture position alternately by turning CENTERING MAGNETS for proper picture position. 5. Check the picture with off-air signal.
WIDTH (WID)	1. Receive NTSC signal. 2. Select the "FULL" mode by PIC SIZE button on Remote Control. 3. Call up the adjustment mode display, then select the item WID. 4. Press the VOLUME ▲ or ▼ button to get the picture so that left and right eddes of video signal begin to lack. 5. Press the VOLUME ▲ button to advance the data by 12 steps. NOTE: Check the horizontal picture position is correct.

ITEM	ADJUSTMENT PROCEDURE
VERTICAL LINEARITY (VLIN) (FULL mode only)	1. Receive cross-hatch pattern. 2. Call up the adjustment mode display, then select the item **VLIN**. 3. Press the VOLUME ▲ or ▼ button to obtain the picture of the best linearity. 4. Then readjust the item HIT. 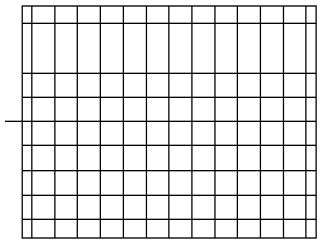
WHITE BALANCE (RCUT) (GCUT) (BCUT) (RDRV) (BDRV)	1. Press RESET button on TV or remote hand set. 2. Call up the adjustment mode display, then adjust the data of items **RCUT**, **GCUT** and **BCUT** to “40”. 3. Press TV (ANT)/VIDEO button on TV. 4. Gradually rotate R, G and B SCREEN volume of FOCUS PAC (page 8) clockwise or counterclockwise until the raster appears slightly on the CRT through the each lens, and leave them. (Look into the lens in order to check the raster.) 5. Press TV (ANT)/VIDEO button on TV again. 6. Exit from service mode. 7. Receive white laster pattern signal, and adjust the contrast to the minimum to make white picture to low light. 8. Adjust the data of items **RCUT**, **GCUT** and **BCUT** for low light area. 9. Adjust the contrast to the maximum to make white picture to high light. 10. Adjust the data of items **GDRV** and **BDRV** Controls for proper white-balanced picture in high light area. 11. Check the white balance in both low and high light areas. If necessary, perform again steps from 7 to 9.
HEIGHT (HIT)	1. Receive NTSC signal. 2. Select the "FULL" mode by PIC SIZE button on Remote Control. 3. Call up the adjustment mode display and select the item HIT. 4. Press the VOLUME ▲ or ▼ button to get the picture so that top and bottom of video signal begin to lack. 5. Press the VOLUME ▲ button to advance the data by 9 steps. Note: Check the vertical picture position is correct. Adjust the data of height after vertical linearty.

CONVERGENCE ADJUSTMENT

Adjust convergence from center to circumference in order.

KEY FUNCTION IN THE CONVERGENCE ADJUSTMENT:

Up :	2 button
Selet Green color:	3 button
Left :	4 button
Blinking of cursor ON/OFF:	5 button
Right:	6 button
Adjust mode ON/OFF:	7 button
Down:	8 button
Erase Green line:	0 button
Erase Red line:	100 button
Erase Blue line:	ENT button

1. Select the adjustment mode following the steps on page 10.

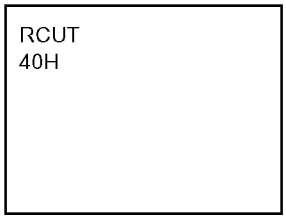

2. Press “7” button to display the built-in cross-hatch pattern.

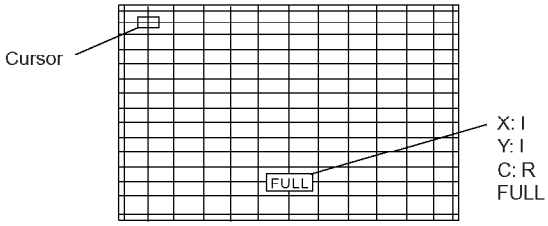

3. Press PIC-SIZE button to select the FULL mode.

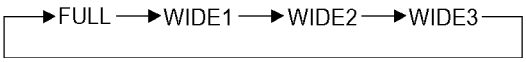

The pattern includes three colors (R, G, B).
The cursor should be blinking in Red.
This means that the Red color is adjustable.
Adjustment around cursor can be done.

4. Press “3” button to select Green color to be adjusted.
5. Press “5” button to stop the blinking of cursor.
6. Press “2 (up)”, “8 (down)”, “4 (left)” or “6 (right)” to obtain the correct cross-hatch pattern as above.
   If necessary, the specified color line can be erased from the screen.
   100 button ..... to erase Red line
   0 button ..... to erase Green line
   ENT button ..... to erase Blue line
7. Press “5” button to make the cursor blinking.
8. Press “2”, “8”, “4”, “6” buttons to move the cursor to other point to be adjusted.
9. Repeat steps 5 to 8.
10. Repeat steps 4 to 9 to adjust Red and Blue colors.
    Converge the selected color line into the Green line.
11. Press “7” button to enter the adjusted states.
    At this time, picture changes for about 1 second.
12. Repeat steps 3 to 12 for WIDE mode.
13. Press “7” button again to return to the normal picture.

Note:
Adjusting procedure in replacing convergence board.

1. User convergence center check. Make sure the best convergence setting is about the center of adjustable range.
2. CENTERING ADJUSTMENT
3. PICTURE POSITION ADJUSTMENT
4. HIT, WID ADJUSTMENT
5. CONVERGENCE ADJUSTMENT

Adjusting Dimension of Each Picture Screen
(16:9 screen size:) 56 inches

(1) FULL (NTSC)
56 inches 16:9 Screen Size: horizontal 1240mm : Vertical 700mm

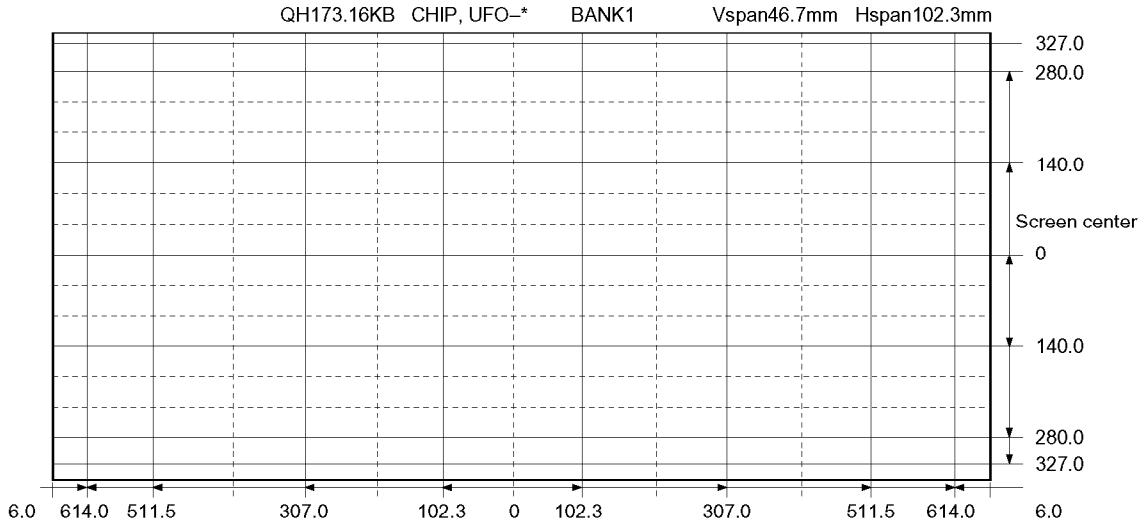

(2) WIDE1 (NTSC)

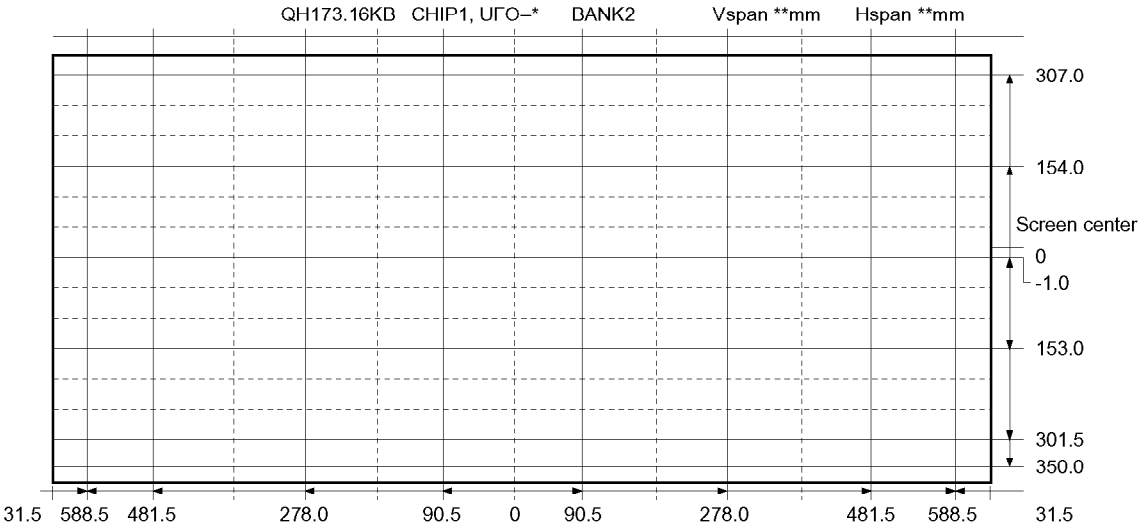

(3) WIDE2 (NTSC)

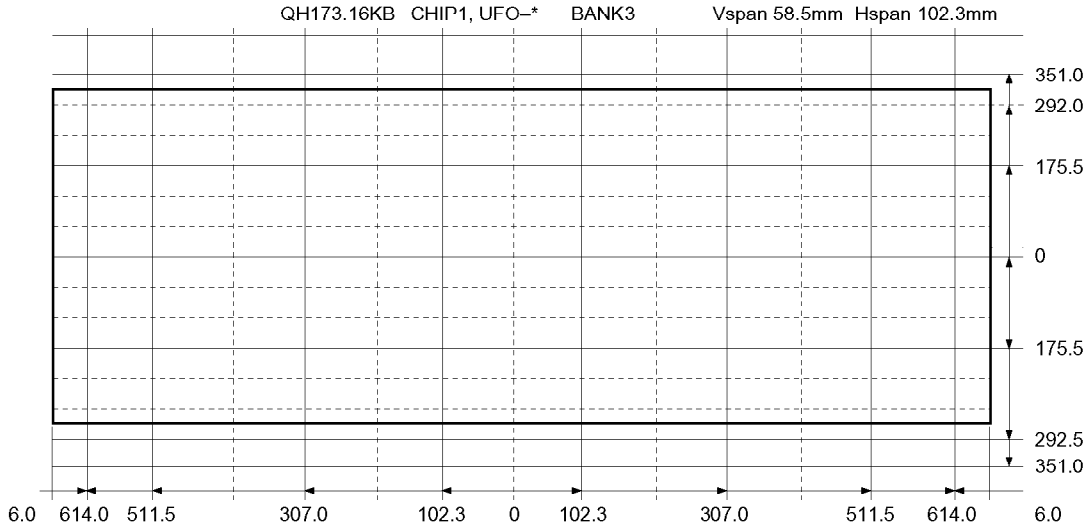

(4) WIDE3 (NTSC)

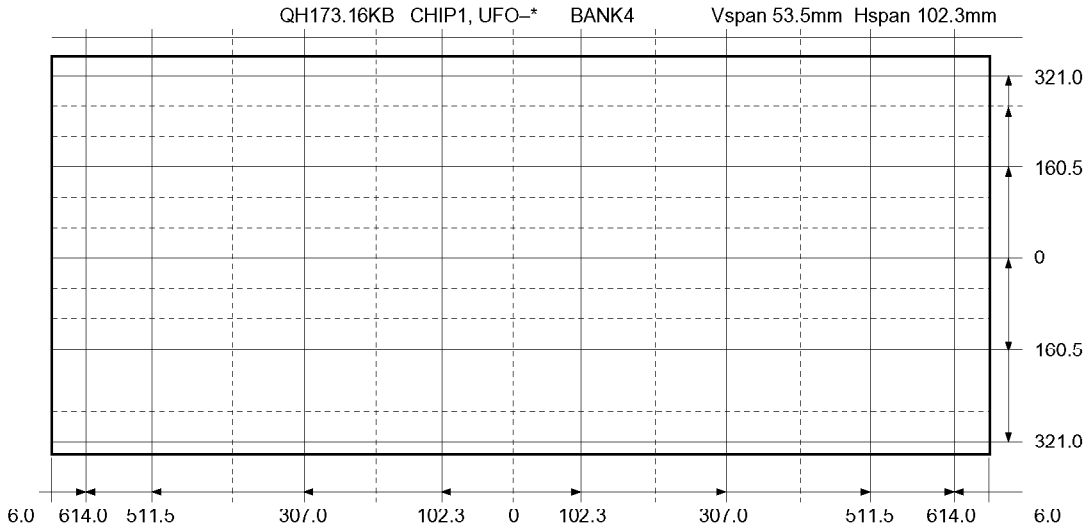

(5) HD (1080I)

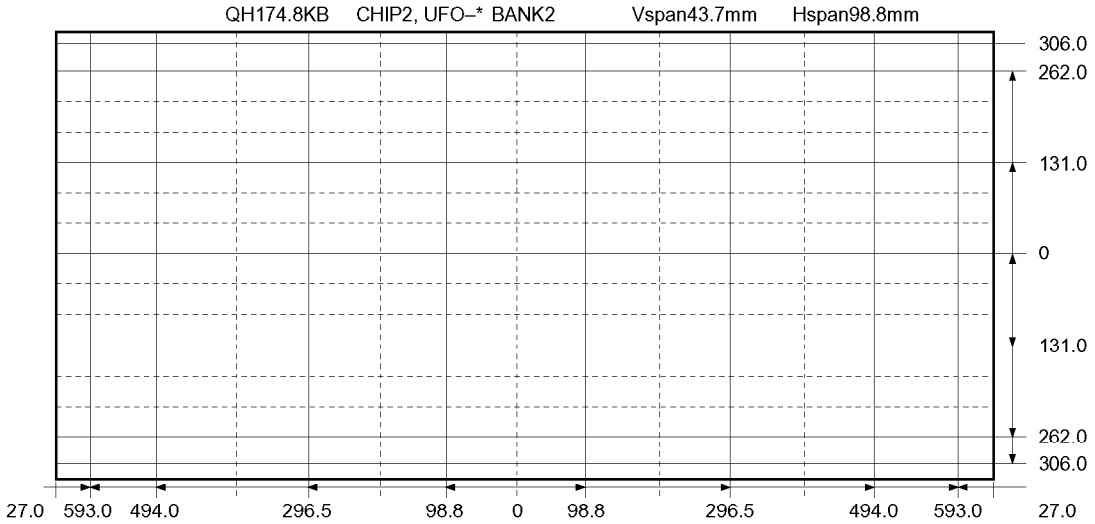

Adjusting Dimension of Each Picture Screen
(16:9 screen size:) 40 inches

(1) FULL (NTSC)
40 inches 16:9 Screen Size: horizontal 885mm : Vertical 498mm

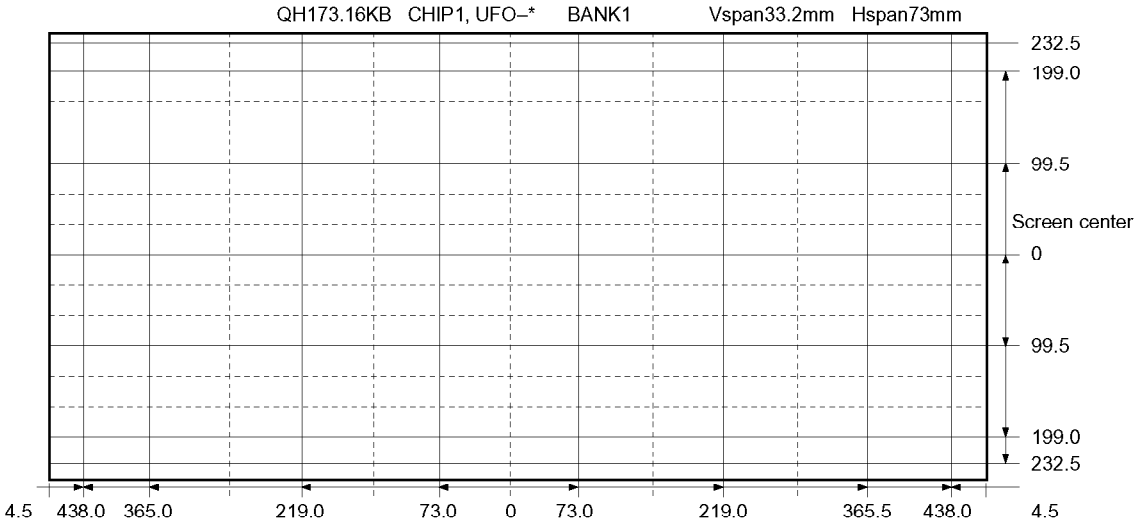

(2) WIDE1 (NTSC)

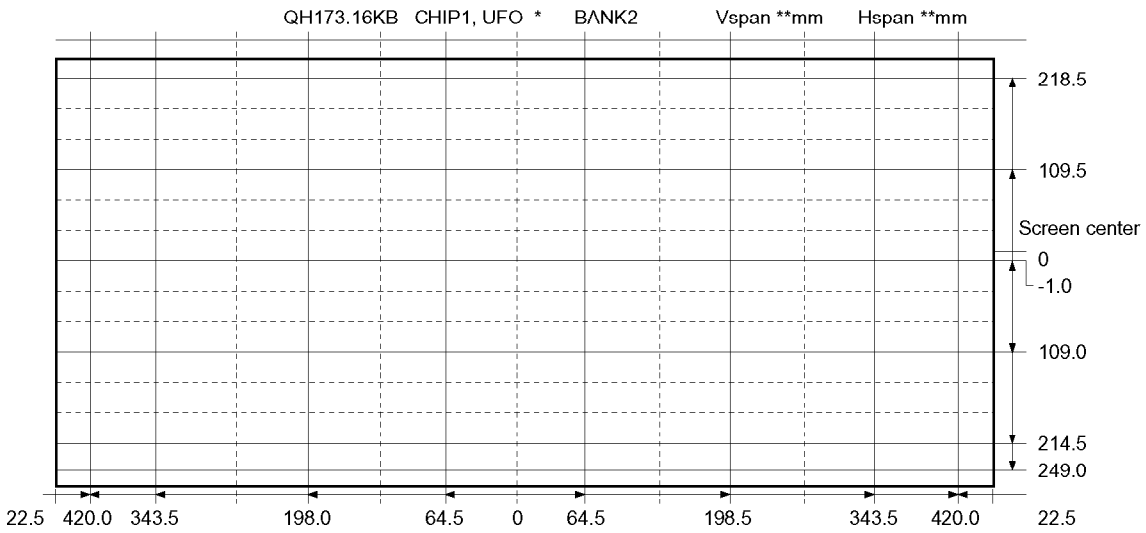

(3) WIDE2 (NTSC)

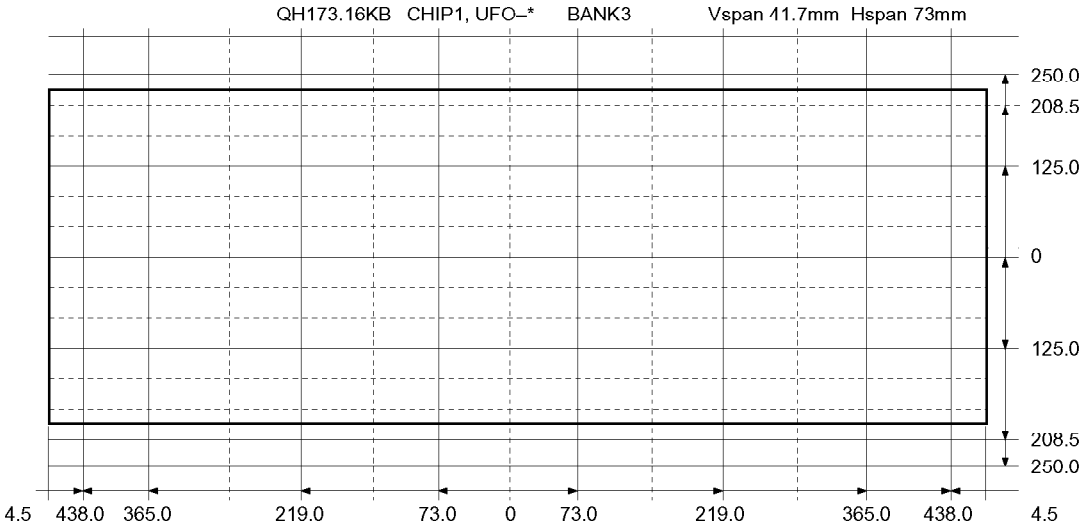

(4) WIDE3 (NTSC)

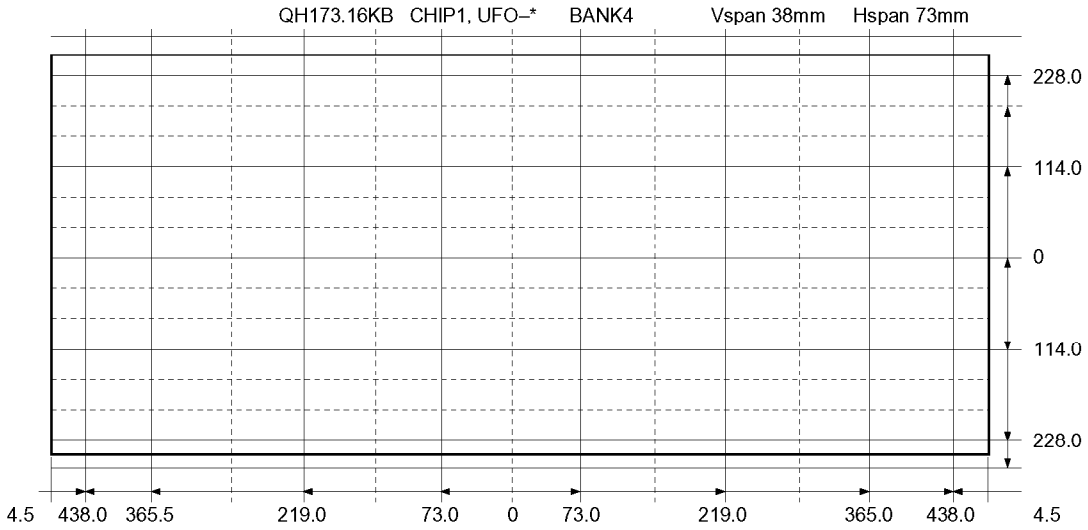

(5) HD (1080I)

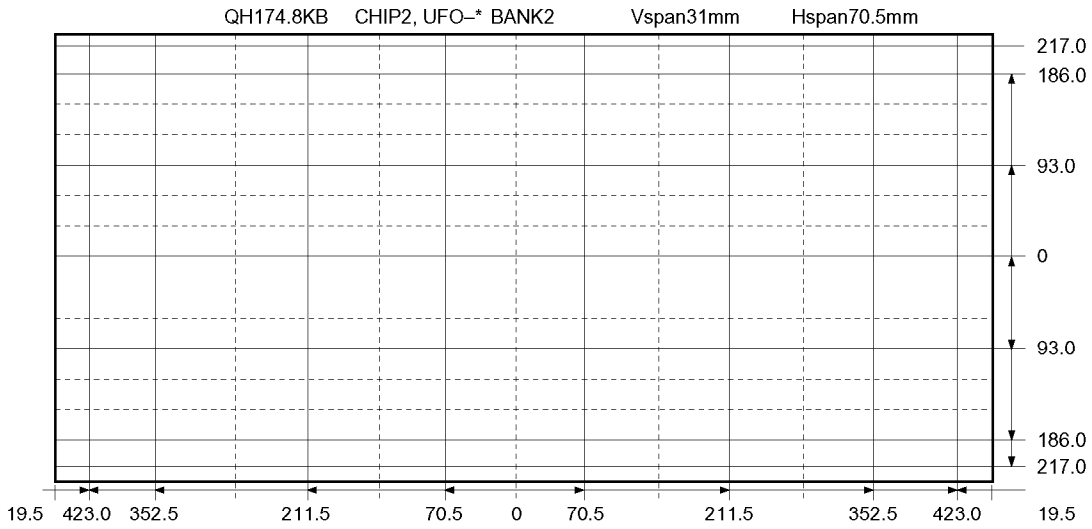

NOTES

In many cases, color misconvergence may be corrected by returning HIT and WID data in main deflection side to initial adjusting values. Following cases will surely require readjustment of convergence.

CRT REPLACEMENT

When CRT is replaced, main deflection readjustment and color matching are required.
Perform following procedures.

1. Replace two CRT's of blue and red.
2. Perform horizontal adjustment for blue and red yokes on base of green CRT data. Mount yoke and velocity mod. coil alignment, pushing towards CRT without gap.
3. Adjust alignment of blue and red. (Refer Alignment adjustment for details.)
4. Rotating centering magnet, adjust CRT centers of red and blue to CRT center of green.
   (Picture position adjustment)
5. Adjust HIT and WID data of main deflection, and decide data at the most precise screen comparing to green data.
6. Adjust convergence of each screen picture for color matching. Do not move green one at this time.
7. After convergence adjustment of each screen picture finishes, replace green CRT.
   For green CRT as well, repeat steps 2 to 5 above on bases of red and blue color matching to adjust convergence.

REPLACING CONVERGENCE UNIT

When replacing convergence unit, all picture screens require readjustment basically, but the following method allows process be reduced considerably.

1. Replace the memory (Q713) on defective unit with memory on new unit. Mounting the unit on the SET after the above working realizes picture screen before replacement immediately.
2. Mount unit which has combination of old and new memories, on SET and turn it on. Screen shows whole picture looks like straightly shifted towards vertical or horizontal direction.
3. Adjust again centers of green, red and blue with centering magnets.
4. Check each picture screen for slight disparity of color and picture size. If necessary, add some adjustments of main deflection and color matching of convergence.

SCREEN AND MIRROR ALIGNMENTS

ASSEMBLING OF FRONT SCREEN

MOUNTING OF FRONT SCREEN

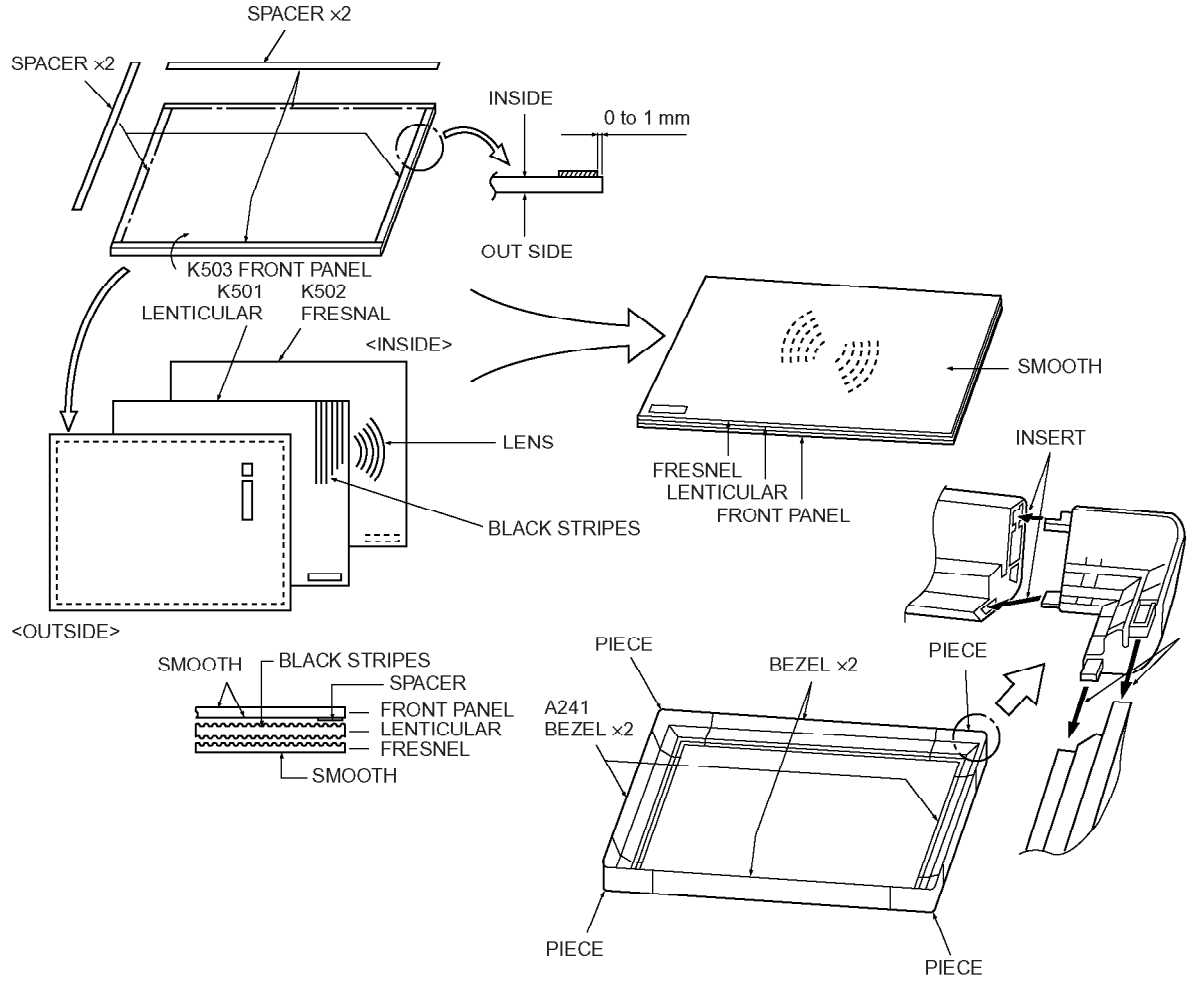

* Please refer to Mechanical Disassembly for 40" on page 31.

CAUTION : Do not hold the optical system parts (lens and mirror) with bare hand to avoid finger-prints on the surface of those parts.

HOW TO CLEAN LENS AND MIRROR

1. Be sure to remove sand dust with an air brush, etc.
2. When it is stained slightly, breathe upon it and wipe away with the specified cleaning cloth.
   For other stains than the above, wipe the stains away with the specified cloth into which a cleaning liquid has been soaked.

Cleaning liquid..... **LENS LUSTER** (Manufactured by Edmund Scientific Co.), etc.

HOW TO CLEAN SCREEN

When cleaning the screen, use a soft cloth so as not to damage the screen.

1. Wipe the screen with a dry cloth to remove moisture on the screen.

Note : Absolutely do not use detergent, water, alcohol, benzine, thinner, etc. for cleaning in order not to wipe away the black print on the surface.

CIRCUIT CHECKS

HIGH VOLTAGE CHECK

CAUTION: There is no HIGH VOLTAGE ADJUSTMENT on this chassis. Checking should be done following the steps below.

1. Connect an accurate high voltage meter to the anode of the picture tube.
2. Turn on the receiver. Set the BRIGHTNESS and CONTRAST to minimum (zero beam current).
3. High voltage must be measured below (B) kV.

   Refer to table-1 for high voltage (B).
   (See SETTING & ADJUSTING DATA on page 23)
4. Vary the BRIGHTNESS to both extremes to be sure the high voltage does not exceed the limit under any conditions.

CAUTION:
When the following parts fail, check the High Voltage after replacing.

Location No.	Name	Descriptions	
		40", 43"	50"~65"
T461	Flyback	TFB3088AD	←
C407	Capacitor	4300pF, ±3%	5100pF, ±3%
C408	Capacitor	0.027μF, ±5%	0.022μF, ±3%
C445	Capacitor	0.015μF, ±5%	0.022μF, ±5%
C446	Capacitor	0.011μF, ±5%	0.012μF, ±5%
C447	Capacitor	6200PF, ±3%	5600pF, ±3%
C448	Capacitor	8200PF, ±5%	←
C449	Capacitor	1000PF, ±3%	←

ANODE VOLTAGE MEASURING METHOD

CAUTION: Take extra precaution when measuring this high voltage. High voltages are also present in surrounding circuit boards (CRT DRIVE assembly, DEFLECTION assembly, and POWER SUPPLY assembly).

1. Disconnect the FBT anode cable as outlined below. Measure high voltage at the point where the cable enters the FBT.
2. Holding the rubber cover firmly, turn it counterclockwise and check that the lock has been disengaged. (See Fig. b on page 9.)
3. Determine the extent of the rubber cover before disconnecting the cable.
4. Pull straight up the anode cable to disconnect.
5. When reconnecting the cable, proceed in the reverse order. After reconnecting, tug on the cable to check that it is secure.

FS CIRCUIT CHECK

The Fail Safe (FS) circuit check is indispensable for the final check in servicing. Checking should be done following the steps below.

1. Turn the receiver on.
2. Temporarily short TP- (R) and TP- (X) on the DEF/POWER Board with a jumper wire.
   Raster and sound will disappear.
3. The receiver must remain in this state even after removing the jumper wire. This is the evidence that the FS circuit is functioning properly.
4. To obtain a picture again, temporarily turn the receiver off and allow the FS circuit more than 5 seconds to reset. Then turn the receiver on to produce a normal picture.

Troubleshooting Guide for Fail Safe Circuit

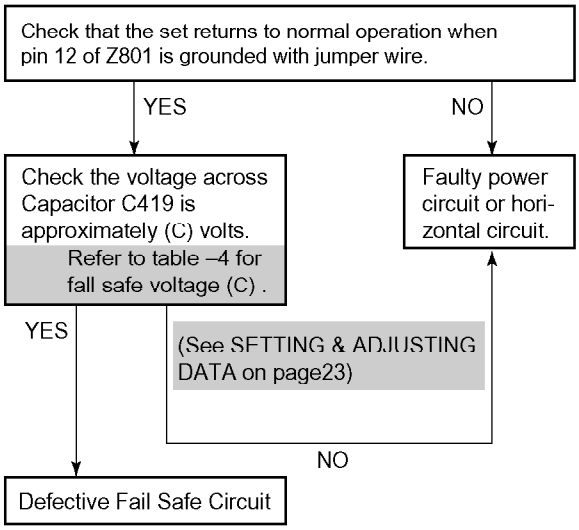

SETTING & ADJUSTING DATA

【SAFETY INSTRUCTIONS】

		40, 56"
HIGH VOLTAGE AT ZERO BEAM:	(A)	29.5 kV
MAX HIGH VOLTAGE:	(B)	31.0 kV

Table-1

【SERVICE MODE】

ADJUSTING ITEMS AND DATA IN THE SERVICE MODE:

Item	Name of adjustment	Preset	Date
RCUT	R CUTOFF	40H	←
GCUT	G CUTOFF	40H	←
BCUT	B CUTOFF	40H	←
RDRV	R DRIVE	40H	←
BDRV	B DRIVE	40H	←
BRTC	SUB-BRIGHT	80H	←
TNTC	SUB-TINT	44H	←
SCOL	SUB COLOR	05H	←
SCNT	SUB-CONTRAST	10H	←
HPOS	HORIZ. POSITION	6DH	←
VPOS	VERT. POSITION	00H	←
HIT	HEIGHT	64H	55H
LIN	V-LINEARITY	12H	←
VSC	V-S CORRECTION	10H	←
WID	PICTURE WIDTH	23H	←
VPS	V-SHIFT	0AH	←
EYOF	Y1 BLACK (Q501)	07H	←
ECNT	Y1 SCONT (Q501)	16H	←
EIOF	R-Y BLACK (Q501)	20H	←
EQOF	R-Y BLACK (Q501)	20H	←

Item	Name of adjustment	Preset	Date
HPHA	HORIZ. PHASE (Q510)	—	←
BLKS	VERT. BLANKING START	—	←
BLKD	VERT. BLANKING END	—	←
PYOF	PIP Y OFFSET	17H	←
PIOF	PIP I OFFSET	24H	←
PQOF	PIP Q OFFSET	1EH	←
VCP	V-COMPENSATE	0AH	←
PARA	E-W PARABOLA (DPC)	29H	←
CNR	E-W CORNER	08H	←
HCP	H-COMPENSATE	00H	←
VFC	V-F CORRECT	00H	←
PHUE	PIP TINT	40H	←
PCNT	PIP CONT	10H	←
PCOL	PIP COLOR	15H	←
RGBB	RGB BRIGHT	54H	←
VCEN	V POSITION	70H	←
TVOP	TV OPTION	00H	←
OPT0	TV SET OPTION	50H	←
OPT1	TV SET OPTION	05H	←

Table-2

【CIRCUIT CHECKS】

FBT DETECTION VOLTAGE	(C)	24.5V

Table-3

LOCATION OF CONTROLS (Representative : 56H80)

TV front

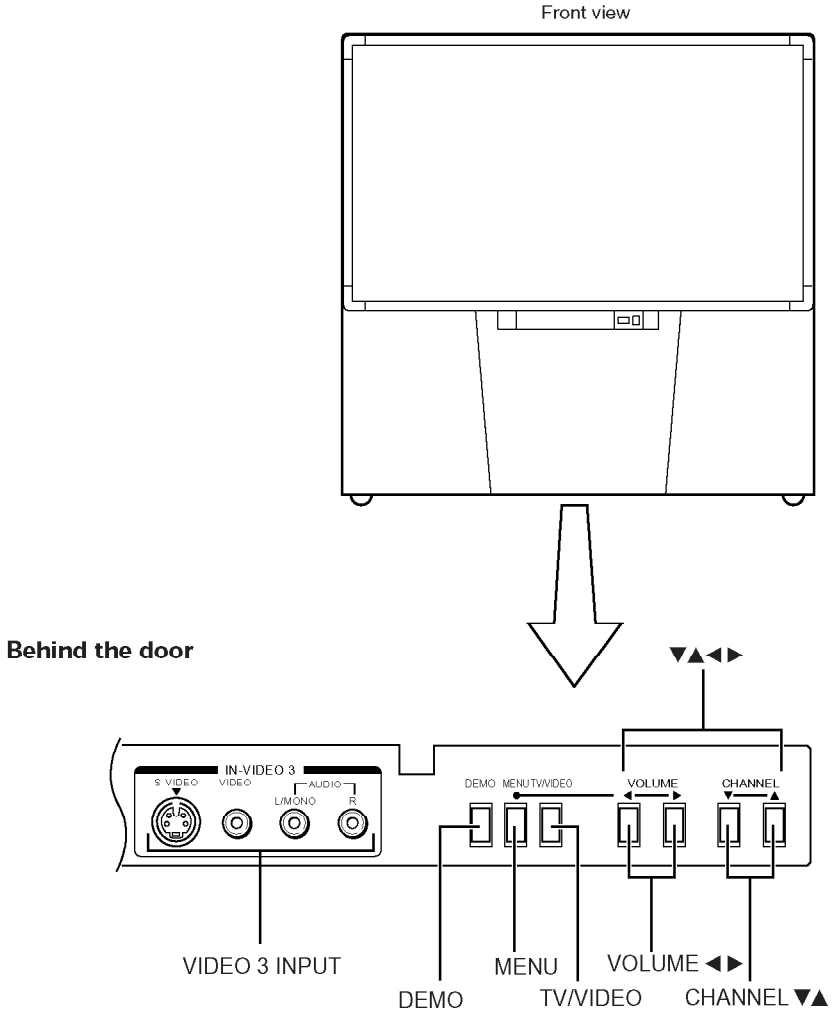

TV rear

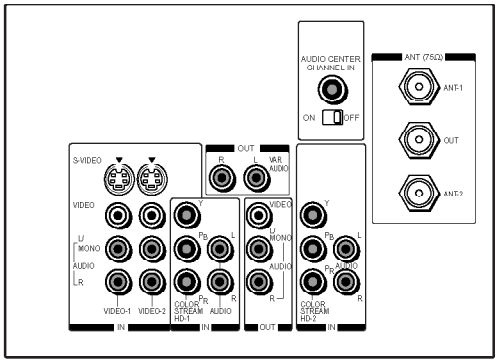

Remote Control

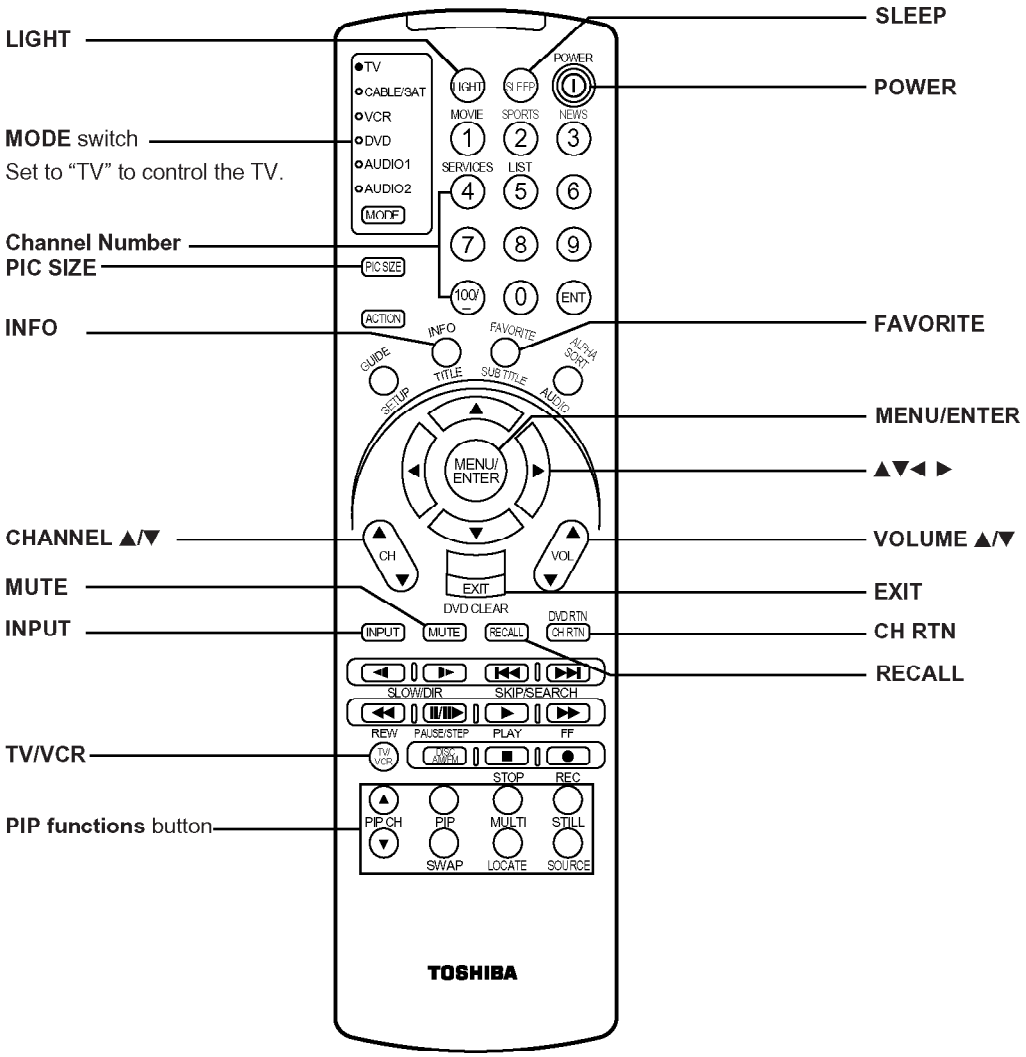

SPECIFIC INFORMATIONS

PROGRAMMING CHANNEL MEMORY

The channel memory is the list of TV channel numbers the TV tunes in when you press the CHANNEL ▲ or ▼ button.
First, use the TV/CABLE and CH PROGRAM functions to preset all active channels in your area automatically.
If necessary, arrange the preset channels with the ADD/ERASE functions so that you can tune into only desired channels.
Note: If you utilize both ANT-1 and ANT-2 terminals for some model, perform programming channels for each input source.

TV/CABLE function

1 Press **MENU**, then press ► or ◄ until the SET UP menu appears.

2 Press ▼ (or ▲) until "TV/CABLE" is highlighted.

3 Press ► or ◄ to highlight either "TV" or "CABLE", whichever you use.

CH PROGRAM function

1 Select "CH PROGRAM" following steps 1 and 2 above.

2 Press ► or ◄ to start channel programming.
The TV will automatically cycle through all the TV or CABLE channels selected by the TV/CABLE function, and store active channels in the channel memory.

3 When channel programming is complete, you will see the message to the right appears.

4 Press **CHANNEL** ▲ or ▼ to make sure the channel programming has been done properly.

ADD/ERASE function

After performing the CH PROGRAM function, you can add or erase specific channels.

1 Select the channel you want to erase using the **CHANNEL** ▲ or ▼ button, or select the channel you want to add using the **Channel Number** buttons.

2 Press **MENU**, then press ► or ◄ until the SET UP menu appears.

3 Press ▼ (or ▲) until "ADD/ERASE" is highlighted.

4 Press ► or ◄ :
To erase the channel press the button until "ERASE" is highlighted.

To add the channel press the button until "ADD" is highlighted.

5 Repeat steps 1 to 4 for other channels.

You have now completed the channel programming.

Note: The CHANNEL ▼/▲ buttons on the TV function as the ▼/▲ buttons while a menu is on the screen.

* Please refer to owner's manual in detail.

CIRCUIT BLOCK DIAGRAM

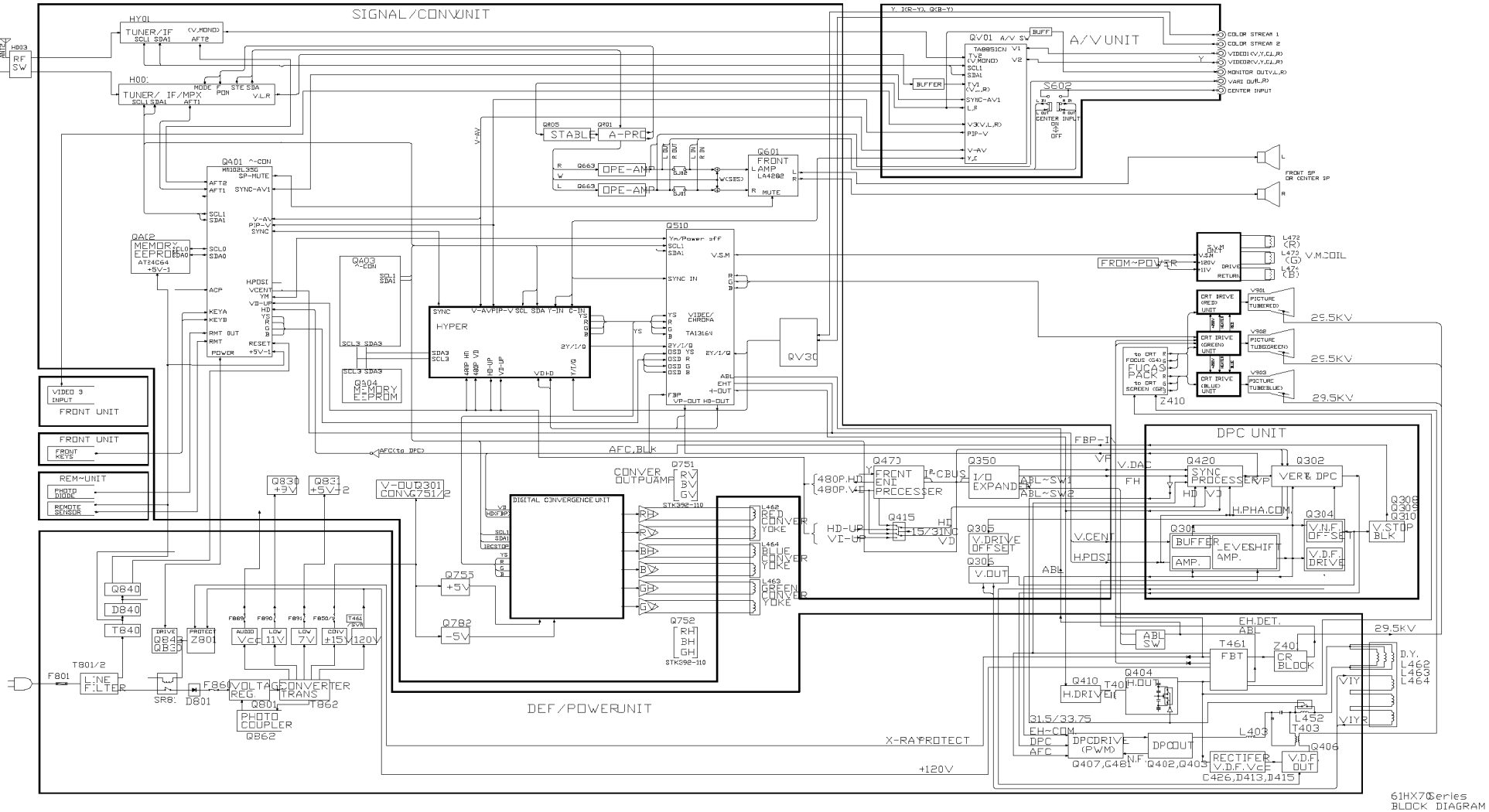

MECHANICAL DISASSEMBLY (for 56H80)

1 Speaker Grille Removal

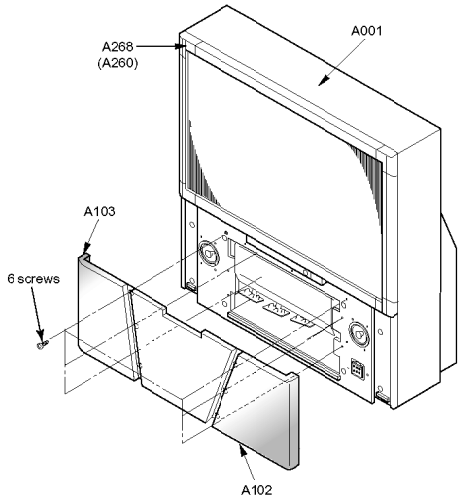

2 Control Panel Removal

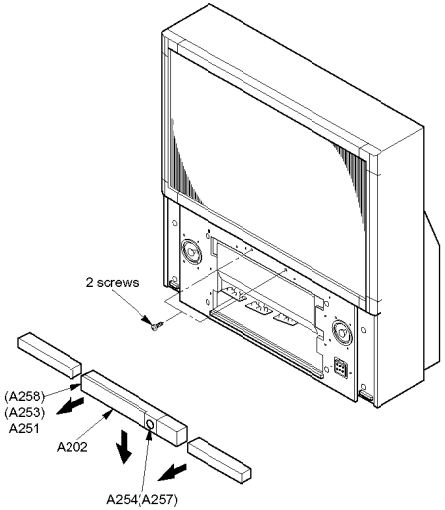

3 Front Mask Removal

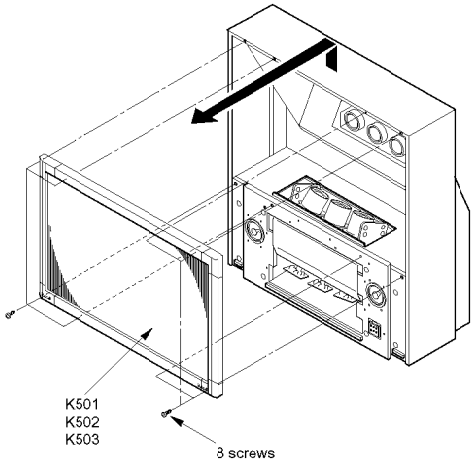

4 Shield Plate, Lens Removal

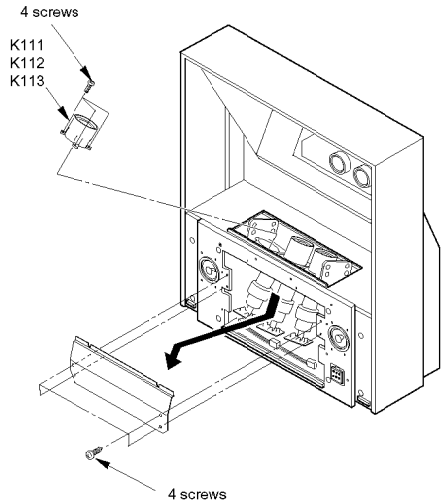

5 Mirror Removal

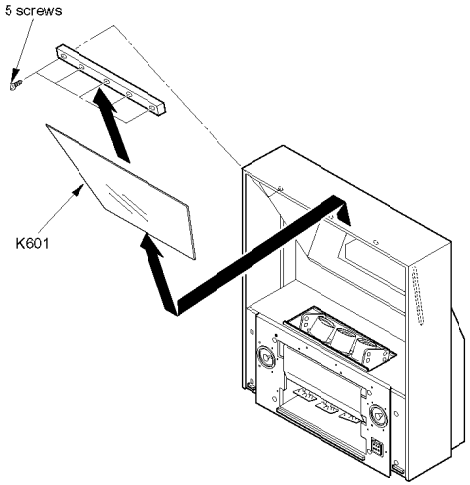

6 Back Board Removal

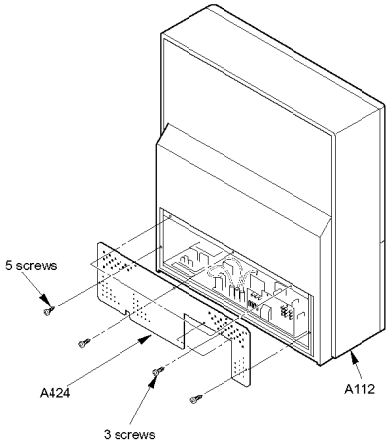

7 Light Box Removal

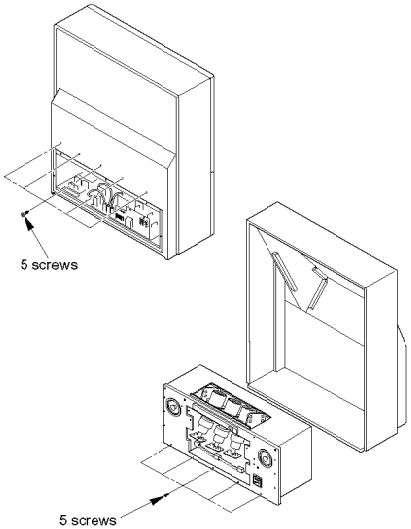

MECHANICAL DISASSEMBLY (for 40H80)

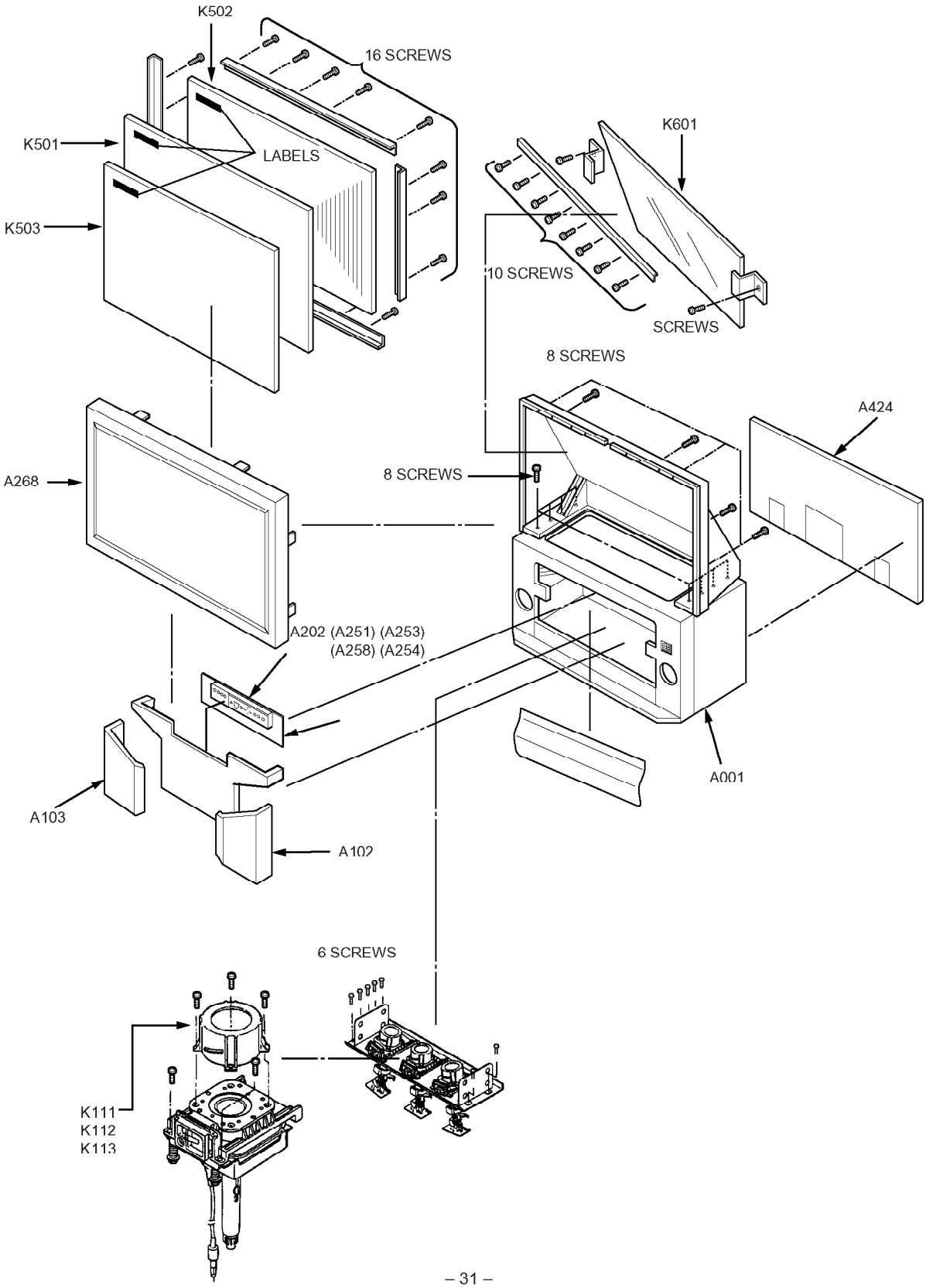

CHASSIS REPLACEMENT PARTS LIST

WARNING: BEFORE SERVICING THIS CHASSIS, READ THE "X-RAY RADIATION PRECAUTION", "SAFETY PRECAUTION" AND "PRODUCT SAFETY NOTICE" ON PAGE 3 OF THIS MANUAL.

CAUTION: The international hazard symbols "⚠" in the schematic diagram and the parts list designate components which have special characteristics important for safety and should be replaced only with types identical to those in the original circuit or specified in the parts list. The mounting position of replacements is to be identical with originals. Before replacing any of these components, read carefully the PRODUCT SAFETY NOTICE. Do not degrade the safety of the receiver through improper servicing.

NOTICE:

- *The part number must be used when ordering parts, in order to assist in processing, be sure to include the Model number and Description.*
- *The PC board assembly with ∗ mark is no longer available after the end of the production.*

Models : 56H80/40H80

Capacitors	CD	:	Ceramic Disk	PF	:	Plastic Film	EL	: Electrolytic
Resistors	CF	:	Carbon Film	CC	:	Carbon Composition	MF	: Metal Film
	OMF	:	Oxide Metal Film	VR	:	Variable Resistor	FR	: Fusible Resistor

(All CD and PF capacitors are ±5%, 50V and all resistors, ±5%, 1/6W unless otherwise noted.)

Location No.	Part No.	Description
CAPACITORS		
C102	24665221	EL, 220μF, ±20%, 10V
C105	24109102	Chip, 1000pF, ±10%
C106	24669479	EL, 4.7μF, ±20%, 50V
C107	24666221	EL, 220μF, ±20%, 16V
C112	24665221	EL, 220μF, ±20%, 10V
C115	24109102	Chip, 1000pF, ±10%
C117	24666221	EL, 220μF, ±20%, 16V
C151	24212102	CD, 1000pF, ±10%
C201	24092730	Chip, 0.1μF, ±10%, 16V
C205	24206229	EL, 2.2μF, ±20%, 50V
C207	24105100	Chip, 10pF, ±0.5pF
C208	24105100	Chip, 10pF, ±0.5pF
C209	24105100	Chip, 10pF, ±0.5pF
C212	24666100	EL, 10μF, ±20%, 16V
C220	24567104	PF, 0.1μF
C221	24503041	PF, 0.1μF, 63V
C301	24567683	PF, 0.068μF
C302	24567224	PF, 0.22μF
C303	24666101	EL, 100μF, ±20%, 16V
C304	24503041	PF, 0.1μF, 63V
C305	24503041	PF, 0.1μF, 63V
C306	24567103	PF, 0.01μF
C307	24617912	EL, 2.2μF, ±10%, 50V
C308	24567183	PF, 0.018μF
C309	24212102	CD, 1000pF, ±10%
C310	24073020	EL, 1000μF, ±20%, 10V
C311	24567103	PF, 0.01μF
C312	24591102	PF, 1000pF
C313	24567474	PF, 0.47μF
C314	24503041	PF, 0.1μF, 63V
C315	24073020	EL, 1000μF, ±20%, 10V
C315	24206229	EL, 2.2μF, ±20%, 50V
C316	24666101	EL, 100μF, ±20%, 16V
C317	24591222	PF, 2200pF
C318	24591182	PF, 1800pF
C319	24667101	EL, 100μF, ±20%, 25V
C320	24617820	EL, 100μF, ±20%, 50V
C321	24669101	EL, 100μF, ±20%, 50V
C322	24567393	PF, 0.039μF
C323	24092748	Chip, 0.056μF, ±10%, 16V

Location No.	Part No.	Description
C324	24567105	PF, 1μF
C325	24082057	PF, 0.22μF, 100V
C326	24567334	PF, 0.33μF
C327	24567224	PF, 0.22μF
C328	24082260	PF, 4700pF, 100V
C329	24669100	EL, 10μF, ±20%, 50V
C330	24085946	EL, 10μF, ±20%, 16V, Non Polar
C331	24109333	Chip, 0.033μF, ±10%, 25V
C332	24617820	EL, 100μF, ±20%, 50V
C333	24693473	PF, 0.047μF, 100V
C334	24109471	Chip, 470pF, ±10%
C335	24567224	PF, 0.22μF
C336	24666100	EL, 10μF, ±20%, 16V
C340	24567224	PF, 0.22μF
C350	24669229	EL, 2.2μF, ±20%, 50V
C351	24503041	PF, 0.1μF, 63V
C352	24666220	EL, 22μF, ±20%, 16V
C401	24214332	CD, 3300pF, ±10%, 500V
C402	24092463	Chip, 0.22μF, ±10%, 16V
C402	24214391	CD, 390pF, ±10%, 500V
C403	24676220	EL, 22μF, ±20%, 100V
C404	24206229	EL, 2.2μF, ±20%, 50V
C405	24567124	PF, 0.12μF
C406	24109223	Chip, 0.022μF, ±10%, 25V
⚠C407	24082609	PF, 5100pF, ±3%, 1800V (56H80)
⚠C407	24082607	PF, 4300pF, ±3%, 1800V (40H80)
⚠C408	24820223	PF, 0.022μF, 630V (56H80)
⚠C408	24820273	PF, 0.027μF, 630V (40H80)
C410	24095900	PF, 3.3μF, ±10%, 100V
C410	24108221	Chip, 220pF
C411	24678220	EL, 22μF, ±20%, 200V
C412	24828823	PF, 0.082μF, 200V
C413	24214221	CD, 220pF, ±10%, 500V
⚠C414	24082647	PF, 0.27μF, 400V
C415	24092484	CD, 1500pF, ±10%, 2kV
C416	24095716	PF, 1.5μF, ±10%, 250V
⚠C417	24082648	PF, 0.3μF, 400V
C418	24679330	EL, 33μF, ±20%, 250V

Location No.	Part No.	Description
C419	24669479	EL, 4.7μF, ±20%, 50V
C420	24591223	PF, 0.022μF
C423	24640908	EL, 33μF, ±20%, 160V
C424	24591102	PF, 1000pF
C426	24211222	CD, 2200pF, ±10%, 2kV
C426	24666331	EL, 330μF, ±20%, 16V
C427	24109103	Chip, 0.01μF, ±10%, 25V
C427	24828473	PF, 0.047μF, 200V
C428	24797010	EL, 1μF, ±20%, 50V
C429	24109103	Chip, 0.01μF, ±10%, 25V
C429	24591153	PF, 0.015μF
C430	24085903	EL, 1μF, ±20%, 50V, Non-Polar
C430	24567123	PF, 0.012μF
C431	24503041	PF, 0.1μF, 63V
C431	24591102	PF, 1000pF
C432	24567103	PF, 0.01μF
C432	24567333	PF, 0.033μF
C434	24501561	PF, 560pF
C435	24501272	PF, 2700pF
C436	24669479	EL, 4.7μF, ±20%, 50V
C437	24567103	PF, 0.01μF
C438	24591272	PF, 2700pF
C439	24669229	EL, 2.2μF, ±20%, 50V
C440	24669229	EL, 2.2μF, ±20%, 50V
C441	24501272	PF, 2700pF
C442	24501102	PF, 1000pF
C443	24503041	PF, 0.1μF, 63V
C444	24666331	EL, 330μF, ±20%, 16V
⚠C445	24567103	PF, 0.01μF
⚠C445	24820223	PF, 0.022μF, 630V (56H80)
⚠C445	24820153	PF, 0.015μF, 630V (40H80)
⚠C446	24501151	PF, 150pF
⚠C446	24820123	PF, 0.012μF, 630V (56H80)
⚠C446	24820113	PF, 0.011μF, 630V (40H80)
⚠C447	24503041	PF, 0.1μF, 63V
⚠C447	24082610	PF, 5600pF, ±3%, 1800V (56H80)
⚠C447	24082611	PF, 6200pF, ±3%, 1800V (40H80)
⚠C448	24666331	EL, 330μF, ±20%, 16V
⚠C448	24820822	PF, 8200pF, 630V
⚠C449	24082592	PF, 1000pF, ±3%, 1800V
⚠C449	24591332	PF, 3300pF
C451	24567563	PF, 0.056μF
C452	24567823	PF, 0.082μF
C453	24669010	EL, 1μF, ±20%, 50V
C454	24567103	PF, 0.01μF
C455	24668331	EL, 330μF, ±20%, 35V
C455	24669010	EL, 1μF, ±20%, 50V
C456	24503041	PF, 0.1μF, 63V
C456	24666221	EL, 220μF, ±20%, 16V
C457	24092730	Chip, 0.1μF, ±10%, 16V
C457	24503041	PF, 0.1μF, 63V
C458	24092730	Chip, 0.1μF, ±10%, 16V
C458	24666331	EL, 330μF, ±20%, 16V
C459	24105101	Chip, 100pF
C460	24109103	Chip, 0.01μF, ±10%, 25V
C461	24109103	Chip, 0.01μF, ±10%, 25V
C462	24109103	Chip, 0.01μF, ±10%, 25V
C463	24105101	Chip, 100pF
C464	24666101	EL, 100μF, ±20%, 16V
C465	24503041	PF, 0.1μF, 63V
C467	24436220	CD, 22pF

Location No.	Part No.	Description
C468	24567474	PF, 0.47μF
C469	24666100	EL, 10μF, ±20%, 16V
C470	24212101	CD, 100pF, ±10%
C472	24567474	PF, 0.47μF
C481	24666101	EL, 100μF, ±20%, 16V
C482	24591223	PF, 0.022μF
C484	24591102	PF, 1000pF
C493	24503041	PF, 0.1μF, 63V
C501	24109103	Chip, 0.01μF, ±10%, 25V
C502	24092730	Chip, 0.1μF, ±10%, 16V
C503	24203101	EL, 100μF, ±20%, 16V
C504	24109222	Chip, 2200pF, ±10%
C505	24108120	Chip, 12pF
C506	24108120	Chip, 12pF
C507	24108120	Chip, 12pF
C508	24100104	Chip, 0.1μF, +80%, -20%, 25V
C509	24203101	EL, 100μF, ±20%, 16V
C509	24666101	EL, 100μF, ±20%, 16V
C510	24092730	Chip, 0.1μF, ±10%, 16V
C510	24666101	EL, 100μF, ±20%, 16V
C511	24109103	Chip, 0.01μF, ±10%, 25V
C511	24203101	EL, 100μF, ±20%, 16V
C512	24206228	EL, 0.22μF, ±20%, 50V
C513	24100104	Chip, 0.1μF, +80%, -20%, 25V
C513	24109103	Chip, 0.01μF, ±10%, 25V
C514	24203100	EL, 10μF, ±20%, 16V
C518	24666100	EL, 10μF, ±20%, 16V
C524	24092730	Chip, 0.1μF, ±10%, 16V
C525	24092730	Chip, 0.1μF, ±10%, 16V
C526	24092730	Chip, 0.1μF, ±10%, 16V
C527	24092730	Chip, 0.1μF, ±10%, 16V
C528	24092730	Chip, 0.1μF, ±10%, 16V
C529	24092730	Chip, 0.1μF, ±10%, 16V
C529	24109103	Chip, 0.01μF, ±10%, 25V
C530	24669010	EL, 1μF, ±20%, 50V
C531	24666101	EL, 100μF, ±20%, 16V
C532	24666100	EL, 10μF, ±20%, 16V
C535	24092730	Chip, 0.1μF, ±10%, 16V
C536	24109103	Chip, 0.01μF, ±10%, 25V
C537	24109103	Chip, 0.01μF, ±10%, 25V
C547	24109103	Chip, 0.01μF, ±10%, 25V
C551	24092730	Chip, 0.1μF, ±10%, 16V
C552	24092730	Chip, 0.1μF, ±10%, 16V
C553	24092730	Chip, 0.1μF, ±10%, 16V
C554	24092730	Chip, 0.1μF, ±10%, 16V
C555	24092730	Chip, 0.1μF, ±10%, 16V
C556	24092730	Chip, 0.1μF, ±10%, 16V
C563	24206229	EL, 2.2μF, ±20%, 50V
C564	24666100	EL, 10μF, ±20%, 16V
C565	24669229	EL, 2.2μF, ±20%, 50V
C566	24669010	EL, 1μF, ±20%, 50V
C567	24109103	Chip, 0.01μF, ±10%, 25V
C568	24109103	Chip, 0.01μF, ±10%, 25V
C569	24109103	Chip, 0.01μF, ±10%, 25V
C570	24669010	EL, 1μF, ±20%, 50V
C601	24109102	Chip, 1000pF, ±10%
C602	24109102	Chip, 1000pF, ±10%
C603	24669100	EL, 10μF, ±20%, 50V
C604	24669100	EL, 10μF, ±20%, 50V
C605	24667101	EL, 100μF, ±20%, 25V
C606	24667101	EL, 100μF, ±20%, 25V
C607	24503041	PF, 0.1μF, 63V
C608	24503041	PF, 0.1μF, 63V
C609	24669102	EL, 1000μF, ±20%, 50V

Location No.	Part No.	Description
C610	24669102	EL, 1000μF, ±20%, 50V
C611	24667221	EL, 220μF, ±20%, 25V
C612	24666221	EL, 220μF, ±20%, 16V
C621	24206479	EL, 4.7μF, ±20%, 50V
C622	24206108	EL, 0.1μF, ±20%, 50V
C623	24100472	Chip, 4700pF, +80%, -20%
C624	24206479	EL, 4.7μF, ±20%, 50V
C625	24206479	EL, 4.7μF, ±20%, 50V
C626	24206479	EL, 4.7μF, ±20%, 50V
C627	24206479	EL, 4.7μF, ±20%, 50V
C628	24206100	EL, 10μF, ±20%, 50V
C629	24206100	EL, 10μF, ±20%, 50V
C630	24206108	EL, 0.1μF, ±20%, 50V
C631	24100472	Chip, 4700pF, +80%, -20%
C632	24203470	EL, 47μF, ±20%, 16V
C633	24567224	PF, 0.22μF
C634	24206108	EL, 0.1μF, ±20%, 50V
C635	24203220	EL, 22μF, ±20%, 16V
C636	24206479	EL, 4.7μF, ±20%, 50V
C637	24206100	EL, 10μF, ±20%, 50V
C638	24794101	EL, 100μF, ±20%, 16V
C639	24109103	Chip, 0.01μF, ±10%, 25V
C640	24109223	Chip, 0.022μF, ±10%, 25V
C641	24109822	Chip, 8200pF, ±10%, 25V
C642	24206100	EL, 10μF, ±20%, 50V
C643	24206479	EL, 4.7μF, ±20%, 50V
C644	24206339	EL, 3.3μF, ±20%, 50V
C645	24109333	Chip, 0.033μF, ±10%, 25V
C646	24109153	Chip, 0.015μF, ±10%, 25V (56H80)
C646	24109473	Chip, 0.047μF, ±10%, 25V (40H80)
C647	24092748	Chip, 0.056μF, ±10%, 16V (56H80)
C647	24092749	Chip, 0.082μF, ±10%, 16V (40H80)
C648	24092748	Chip, 0.056μF, ±10%, 16V (56H80)
C648	24109393	Chip, 0.033μF, ±10%, 25V (40H80)
C649	24109223	Chip, 0.022μF, ±10%, 25V
C650	24109822	Chip, 8200pF, ±10%, 25V
C651	24109103	Chip, 0.01μF, ±10%, 25V
C652	24109103	Chip, 0.01μF, ±10%, 25V
C653	24100103	Chip, 0.01μF, +80%, -20%
C654	24763101	EL, 100μF, ±20%, 16V
C661	24206010	EL, 1μF, ±20%, 50V
C662	24206010	EL, 1μF, ±20%, 50V
C663	24206010	EL, 1μF, ±20%, 50V
C664	24669220	EL, 22μF, ±20%, 50V
C665	24109103	Chip, 0.01μF, ±10%, 25V
C666	24206010	EL, 1μF, ±20%, 50V
C680	24669471	EL, 470μF, ±20%, 50V
C681	24666100	EL, 10μF, ±20%, 16V
C682	24503041	PF, 0.1μF, 63V
C690	24109103	Chip, 0.01μF, ±10%, 25V
C704	24232103	CD, 0.01μF, +80%, -20%
C705	24206479	EL, 4.7μF, ±20%, 50V
C707	24797470	EL, 47μF, ±20%, 50V
C712	24797470	EL, 47μF, ±20%, 50V
C713	24790470	EL, 47μF, ±20%, 160V
C715	24214472	CD, 4700pF, ±10%, 500V
C717	24214472	CD, 4700pF, ±10%, 500V
C718	24666470	EL, 47μF, ±20%, 16V

Location No.	Part No.	Description
C719	24435560	CD, 56pF, 500V
C720	24790220	EL, 22μF, ±20%, 160V
C721	24666470	EL, 47μF, ±20%, 16V
C722	24436820	CD, 82pF
C726	24212102	CD, 1000pF, ±10%
C760	24797470	EL, 47μF, ±20%, 50V
C761	24212102	CD, 1000pF, ±10%
C762	24797470	EL, 47μF, ±20%, 50V
C765	24214472	CD, 4700pF, ±10%, 500V
C766	24214472	CD, 4700pF, ±10%, 500V
C767	24790470	EL, 47μF, ±20%, 160V
C768	24666470	EL, 47μF, ±20%, 16V
C769	24666470	EL, 47μF, ±20%, 16V
C770	24435560	CD, 56pF, 500V
C771	24790220	EL, 22μF, ±20%, 160V
C780	24797470	EL, 47μF, ±20%, 50V
C781	24212102	CD, 1000pF, ±10%
C782	24797470	EL, 47μF, ±20%, 50V
C784	24214472	CD, 4700pF, ±10%, 500V
C786	24214472	CD, 4700pF, ±10%, 500V
C787	24790470	EL, 47μF, ±20%, 160V
C788	24666470	EL, 47μF, ±20%, 16V
C789	24666470	EL, 47μF, ±20%, 16V
C790	24435560	CD, 56pF, 500V
C791	24790220	EL, 22μF, ±20%, 160V
C792	24669229	EL, 2.2μF, ±20%, 50V
C801	24082001	PF, 0.47μF, AC125V
C809	24086067	EL, 1000μF, ±20%, 200V
C810	24086067	EL, 1000μF, ±20%, 200V
C811	24092597	CD, 4700pF, ±20%, AC250V
C812	24092597	CD, 4700pF, ±20%, AC250V
C813	24092597	CD, 4700pF, ±20%, AC250V
C830	24567334	PF, 0.33μF
C831	24666101	EL, 100μF, ±20%, 16V
C833	24666470	EL, 47μF, ±20%, 16V
C834	24667101	EL, 100μF, ±20%, 25V
C835	24667470	EL, 47μF, ±20%, 25V
C836	24567334	PF, 0.33μF
C840	24073058	EL, 2200μF, ±20%, 25V
C842	24664101	EL, 100μF, ±20%, 6.3V
C843	24567105	PF, 1μF
C857	24668332	EL, 3300μF, ±20%, 35V
C858	24668332	EL, 3300μF, ±20%, 35V
C860	24214103	CD, 0.01μF, ±10%, 500V
C863	24567224	PF, 0.22μF
C864	24092474	CD, 220pF, ±10%, 2kV
C866	24567105	PF, 1μF
C867	24591472	PF, 4700pF
C868	24669101	EL, 100μF, ±20%, 50V
C869	24678229	EL, 2.2μF, ±20%, 200V
C870	24082889	PF, 0.068μF, 800V
C871	24092484	CD, 1500pF, ±10%, 2kV
C872	24092478	CD, 470pF, ±10%, 2kV
C873	24567224	PF, 0.22μF
C874	24212102	CD, 1000pF, ±10%
C876	24567474	PF, 0.47μF
C881	24678478	EL, 0.47μF, ±20%, 200V
C882	24794220	EL, 22μF, ±20%, 16V
C883	24082229	PF, 0.1μF, ±10%, 250V
C884	24086916	EL, 330μF, ±20%, 160V
C885	24669479	EL, 4.7μF, ±20%, 50V
C888	24666100	EL, 10μF, ±20%, 16V
C889	24669010	EL, 1μF, ±20%, 50V
C890	24669222	EL, 2200μF, ±20%, 50V

Location No.	Part No.	Description
C894	24668222	EL, 2200μF, ±20%, 35V
C895	24666332	EL, 3300μF, ±20%, 16V
C898	24212102	CD, 1000pF, ±10%
C901	24211102	CD, 1000pF, ±10%, 2kV
C902	24794101	EL, 100μF, ±20%, 16V
C903	24232103	CD, 0.01μF, +80%, -20%
C904	24436681	CD, 680pF
C907	24214101	CD, 100pF, ±10%, 500V
C908	24436390	CD, 39pF
C909	24794221	EL, 220μF, ±20%, 16V
C911	24211102	CD, 1000pF, ±10%, 2kV
C912	24794101	EL, 100μF, ±20%, 16V
C913	24232103	CD, 0.01μF, +80%, -20%
C914	24436821	CD, 820pF
C915	24679330	EL, 33μF, ±20%, 250V
C916	24794102	EL, 1000μF, ±20%, 16V
C917	24214101	CD, 100pF, ±10%, 500V
C918	24503041	PF, 0.1μF, 63V
C919	24794221	EL, 220μF, ±20%, 16V
C921	24211102	CD, 1000pF, ±10%, 2kV
C922	24794101	EL, 100μF, ±20%, 16V
C923	24436681	CD, 680pF
C924	24232103	CD, 0.01μF, +80%, -20%
C926	24214101	CD, 100pF, ±10%, 500V
C927	24503041	PF, 0.1μF, 63V
C928	24203100	EL, 10μF, ±20%, 16V
C929	24794221	EL, 220μF, ±20%, 16V
C961	24763102	EL, 1000μF, ±20%, 16V
C962	24203100	EL, 10μF, ±20%, 16V
C963	24503041	PF, 0.1μF, 63V
C964	24503041	PF, 0.1μF, 63V
C7704	24667101	EL, 100μF, ±20%, 25V
C7705	24567334	PF, 0.33μF
C7706	24567334	PF, 0.33μF
C7707	24667101	EL, 100μF, ±20%, 25V
C7708	24105150	Chip, 15pF
C7709	24105150	Chip, 15pF
C7710	24105150	Chip, 15pF
C7711	24105150	Chip, 15pF
C7712	24105150	Chip, 15pF
C7713	24105150	Chip, 15pF
C7714	24105150	Chip, 15pF
C7715	24105150	Chip, 15pF
C7716	24105150	Chip, 15pF
C7717	24105150	Chip, 15pF
C7718	24105150	Chip, 15pF
C7719	24105150	Chip, 15pF
C7721	24109102	Chip, 1000pF, ±10%
C7722	24105331	Chip, 330pF
C7724	24667331	EL, 330μF, ±20%, 25V
C7725	24667331	EL, 330μF, ±20%, 25V
C7726	24109102	Chip, 1000pF, ±10%
C7727	24105331	Chip, 330pF
C7729	24109102	Chip, 1000pF, ±10%
C7730	24105331	Chip, 330pF
C7732	24105331	Chip, 330pF
C7733	24105331	Chip, 330pF
C7735	24667331	EL, 330μF, ±20%, 25V
C7736	24667331	EL, 330μF, ±20%, 25V
C7737	24109102	Chip, 1000pF, ±10%
C7738	24105331	Chip, 330pF
C7740	24105331	Chip, 330pF
C7741	24105331	Chip, 330pF
C7751	24667101	EL, 100μF, ±20%, 25V

Location No.	Part No.	Description
C7752	24567334	PF, 0.33μF
C7753	24567334	PF, 0.33μF
C7754	24667101	EL, 100μF, ±20%, 25V
C7760	24667470	EL, 47μF, ±20%, 25V
C7761	24667100	EL, 10μF, ±20%, 25V
C7763	24667470	EL, 47μF, ±20%, 25V
C7767	24667101	EL, 100μF, ±20%, 25V
C7768	24667101	EL, 100μF, ±20%, 25V
C7769	24109103	Chip, 0.01μF, ±10%, 25V
C7774	24105101	Chip, 100pF
C7776	24667100	EL, 10μF, ±20%, 25V
C7779	24105331	Chip, 330pF
C7812	24109103	Chip, 0.01μF, ±10%, 25V
C7816	24667100	EL, 10μF, ±20%, 25V
C7817	24109103	Chip, 0.01μF, ±10%, 25V
CA10	24105101	Chip, 100pF
CA13	24109221	Chip, 220pF, ±10%
CA14	24666100	EL, 10μF, ±20%, 16V
CA18	24666470	EL, 47μF, ±20%, 16V
CA20	24105181	Chip, 180pF
CA21	24092743	Chip, 0.47μF, +80%, -20%, 10V
CA22	24109103	Chip, 0.01μF, ±10%, 25V
CA23	24105181	Chip, 180pF
CA24	24092743	Chip, 0.47μF, +80%, -20%, 10V
CA25	24666100	EL, 10μF, ±20%, 16V
CA26	24092538	Chip, 1μF, +80%, -20%, 10V
CA27	24092538	Chip, 1μF, +80%, -20%, 10V
CA29	24109221	Chip, 220pF, ±10%
CA30	24105101	Chip, 100pF
CA34	24105101	Chip, 100pF
CA45	24666100	EL, 10μF, ±20%, 16V
CA49	24666100	EL, 10μF, ±20%, 16V
CA50	24100103	Chip, 0.01μF, +80%, -20%
CA52	24109272	Chip, 2700pF, ±10%
CA54	24105101	Chip, 100pF
CA59	24105101	Chip, 100pF
CA60	24105101	Chip, 100pF
CA61	24666220	EL, 22μF, ±20%, 16V
CA64	24109103	Chip, 0.01μF, ±10%, 25V
CA68	24666100	EL, 10μF, ±20%, 16V
CA69	24109103	Chip, 0.01μF, ±10%, 25V
CA71	24105101	Chip, 100pF
CA72	24085970	EL, 10μF, ±20%, 16V, Non-Polar
CA73	24666100	EL, 10μF, ±20%, 16V
CB01	24105101	Chip, 100pF
CB01	24794470	EL, 47μF, ±20%, 16V (56H80)
CB02	24105101	Chip, 100pF
CB11	24100103	Chip, 0.01μF, +80%, 20%
CB11	24794470	EL, 47μF, ±20%, 16V (40H80)
CB12	24666100	EL, 10μF, ±20%, 16V
CB13	24085970	EL, 10μF, ±20%, 16V, Non-Polar
CB14	24105100	Chip, 10pF, ±0.5pF
CB15	24794100	EL, 10μF, ±20%, 16V
CB33	24109103	Chip, 0.01μF, ±10%, 25V
CB37	24105101	Chip, 100pF
CB38	24105101	Chip, 100pF
CB40	24109103	Chip, 0.01μF, ±10%, 25V
CB41	24666100	EL, 10μF, ±20%, 16V
CB42	24109103	Chip, 0.01μF, ±10%, 25V
CB42	24232103	CD, 0.01μF, +80%, -20%

Location No.	Part No.	Description
CB43	24109103	Chip, 0.01μF, ±10%, 25V
CB62	24105331	Chip, 330pF
CB90	24109103	Chip, 0.01μF, ±10%, 25V
CB91	24666100	EL, 10μF, ±20%, 16V
CD01	24206478	EL, 0.47μF, ±20%, 50V
CD02	24206478	EL, 0.47μF, ±20%, 50V
CD03	24503041	PF, 0.1μF, 63V
CD05	24567103	PF, 0.01μF
CD06	24206478	EL, 0.47μF, ±20%, 50V
CD07	24591472	PF, 4700pF
CD08	24206478	EL, 0.47μF, ±20%, 50V
CD10	24503041	PF, 0.1μF, 63V
CD11	24203100	EL, 10μF, ±20%, 16V
CD12	24203100	EL, 10μF, ±20%, 16V
CD13	24666101	EL, 100μF, ±20%, 16V
CD15	24761102	EL, 1000μF, ±20%, 6.3V
CD16	24206479	EL, 4.7μF, ±20%, 50V
CH001	24100104	Chip, 0.1μF, +80%, -20%, 25V
CH004	24100104	Chip, 0.1μF, +80%, -20%, 25V
CH005	24100104	Chip, 0.1μF, +80%, -20%, 25V
CH006	24100104	Chip, 0.1μF, +80%, -20%, 25V
CH007	24100104	Chip, 0.1μF, +80%, -20%, 25V
CH008	24100104	Chip, 0.1μF, +80%, -20%, 25V
CH009	24100104	Chip, 0.1μF, +80%, -20%, 25V
CH010	24092743	Chip, 0.47μF, +80%, -20%, 10V
CH011	24762221	EL, 220μF, ±20%, 10V
CH012	24763101	EL, 100μF, ±20%, 16V
CH013	24763101	EL, 100μF, ±20%, 16V
CH014	24108101	Chip, 100pF
CH015	24108330	Chip, 33pF
CH016	24108330	Chip, 33pF
CH017	24108330	Chip, 33pF
CH018	24108330	Chip, 33pF
CH019	24108330	Chip, 33pF
CH020	24108330	Chip, 33pF
CH040	24100104	Chip, 0.1μF, +80%, -20%, 25V
CH041	24108101	Chip, 100pF
CH042	24108101	Chip, 100pF
CH043	24108101	Chip, 100pF
CH044	24108101	Chip, 100pF
CH045	24108101	Chip, 100pF
CH046	24108101	Chip, 100pF
CH047	24108101	Chip, 100pF
CH048	24108101	Chip, 100pF
CH051	24100104	Chip, 0.1μF, +80%, -20%, 25V
CH052	24100104	Chip, 0.1μF, +80%, -20%, 25V
CH053	24105070	Chip, 7pF, ±0.5pF
CH061	24109103	Chip, 0.01μF, ±10%, 25V
CH062	24092730	Chip, 0.1μF, ±10%, 16V
CH063	24100104	Chip, 0.1μF, +80%, 20%, 25V
CH101	24105070	Chip, 7pF, ±0.5pF
CH102	24105070	Chip, 7pF, ±0.5pF
CH120	24100104	Chip, 0.1μF, +80%, -20%, 25V
CH121	24100104	Chip, 0.1μF, +80%, -20%, 25V
CH122	24100104	Chip, 0.1μF, +80%, -20%, 25V
CH123	24100104	Chip, 0.1μF, +80%, -20%, 25V
CH124	24100104	Chip, 0.1μF, +80%, -20%, 25V
CH125	24100104	Chip, 0.1μF, +80%, -20%, 25V
CH126	24100104	Chip, 0.1μF, +80%, -20%, 25V
CH127	24100104	Chip, 0.1μF, +80%, -20%, 25V
CH128	24108221	Chip, 220pF
CH129	24108221	Chip, 220pF
CH140	24100104	Chip, 0.1μF, +80%, -20%, 25V

Location No.	Part No.	Description
CH141	24100104	Chip, 0.1μF, +80%, -20%, 25V
CH142	24100104	Chip, 0.1μF, +80%, -20%, 25V
CH143	24100104	Chip, 0.1μF, +80%, -20%, 25V
CH144	24100104	Chip, 0.1μF, +80%, -20%, 25V
CH145	24100104	Chip, 0.1μF, +80%, -20%, 25V
CH146	24100104	Chip, 0.1μF, +80%, -20%, 25V
CH147	24100104	Chip, 0.1μF, +80%, -20%, 25V
CH148	24108221	Chip, 220pF
CH149	24108221	Chip, 220pF
CH160	24100104	Chip, 0.1μF, +80%, -20%, 25V
CH161	24100104	Chip, 0.1μF, +80%, -20%, 25V
CH162	24100104	Chip, 0.1μF, +80%, -20%, 25V
CH163	24100104	Chip, 0.1μF, +80%, -20%, 25V
CH164	24100104	Chip, 0.1μF, +80%, -20%, 25V
CH165	24100104	Chip, 0.1μF, +80%, -20%, 25V
CH166	24100104	Chip, 0.1μF, +80%, -20%, 25V
CH167	24100104	Chip, 0.1μF, +80%, -20%, 25V
CH168	24108221	Chip, 220pF
CH169	24108221	Chip, 220pF
CH170	24105681	Chip, 680pF
CH171	24105681	Chip, 680pF
CH172	24105331	Chip, 330pF
CH173	24105102	Chip, 1000pF, 25V
CH174	24105391	Chip, 390pF
CH175	24105220	Chip, 22pF
CH176	24105391	Chip, 390pF
CH177	24105220	Chip, 22pF
CH178	24105151	Chip, 150pF
CH179	24105102	Chip, 1000pF, 25V
CH180	24105681	Chip, 680pF
CH181	24105681	Chip, 680pF
CH182	24105391	Chip, 390pF
CH183	24105220	Chip, 22pF
CH184	24105391	Chip, 390pF
CH185	24105220	Chip, 22pF
CH186	24105331	Chip, 330pF
CH187	24105102	Chip, 1000pF, 25V
CH188	24105151	Chip, 150pF
CH189	24105102	Chip, 1000pF, 25V
CH190	24105681	Chip, 680pF
CH191	24105681	Chip, 680pF
CH192	24105391	Chip, 390pF
CH193	24105220	Chip, 22pF
CH194	24105331	Chip, 330pF
CH195	24105102	Chip, 1000pF, 25V
CH196	24105391	Chip, 390pF
CH197	24105220	Chip, 22pF
CH198	24105151	Chip, 150pF
CH199	24105102	Chip, 1000pF, 25V
CH200	24105681	Chip, 680pF
CH201	24105681	Chip, 680pF
CH202	24105220	Chip, 22pF
CH203	24105391	Chip, 390pF
CH204	24105391	Chip, 390pF
CH205	24105220	Chip, 22pF
CH206	24105331	Chip, 330pF
CH207	24105102	Chip, 1000pF, 25V
CH208	24105151	Chip, 150pF
CH209	24105102	Chip, 1000pF, 25V
CH210	24105681	Chip, 680pF
CH211	24105681	Chip, 680pF
CH212	24105331	Chip, 330pF
CH213	24105102	Chip, 1000pF, 25V
CH223	24105391	Chip, 390pF

Location No.	Part No.	Description
CH224	24105220	Chip, 22pF
CH225	24105391	Chip, 390pF
CH226	24105220	Chip, 22pF
CH227	24105151	Chip, 150pF
CH228	24105102	Chip, 1000pF, 25V
CH229	24105681	Chip, 680pF
CH230	24105681	Chip, 680pF
CH231	24105391	Chip, 390pF
CH232	24105220	Chip, 22pF
CH233	24105391	Chip, 390pF
CH234	24105220	Chip, 22pF
CH235	24105331	Chip, 330pF
CH236	24105102	Chip, 1000pF, 25V
CH237	24105151	Chip, 150pF
CH238	24105102	Chip, 1000pF, 25V
CH241	24100104	Chip, 0.1μF, +80%, -20%, 25V
CH244	24100104	Chip, 0.1μF, +80%, -20%, 25V
CH245	24100104	Chip, 0.1μF, +80%, -20%, 25V
CH247	24100104	Chip, 0.1μF, +80%, -20%, 25V
CH248	24100104	Chip, 0.1μF, +80%, -20%, 25V
CH249	24092730	Chip, 0.1μF, ±10%, 16V
CH250	24092730	Chip, 0.1μF, ±10%, 16V
CM01	24100104	Chip, 0.1μF, +80%, -20%, 25V
CM02	24100104	Chip, 0.1μF, +80%, -20%, 25V
CM07	24100104	Chip, 0.1μF, +80%, -20%, 25V
CM08	24100104	Chip, 0.1μF, +80%, -20%, 25V
CM09	24100104	Chip, 0.1μF, +80%, -20%, 25V
CR12	24092730	Chip, 0.1μF, ±10%, 16V
CR13	24092730	Chip, 0.1μF, ±10%, 16V
CR14	24092730	Chip, 0.1μF, ±10%, 16V
CR15	24092730	Chip, 0.1μF, ±10%, 16V
CR16	24092730	Chip, 0.1μF, ±10%, 16V
CR17	24092730	Chip, 0.1μF, ±10%, 16V
CS03	24436221	CD, 220pF
CS04	24206010	EL, 1μF, ±20%, 50V
CS07	24436221	CD, 220pF
CS08	24206010	EL, 1μF, ±20%, 50V
CS09	24436331	CD, 330pF
CS10	24206229	EL, 2.2μF, ±20%, 50V
CS11	24206010	EL, 1μF, ±20%, 50V
CS12	24436221	CD, 220pF
CS13	24206010	EL, 1μF, ±20%, 50V
CS14	24436221	CD, 220pF
CS15	24436331	CD, 330pF
CS16	24206229	EL, 2.2μF, ±20%, 50V
CS21	24436101	CD, 100pF
CS22	24436101	CD, 100pF
CS24	24436331	CD, 330pF
CS25	24206229	EL, 2.2μF, ±20%, 50V
CS28	24436331	CD, 330pF
CS29	24436331	CD, 330pF
CS32	24203100	EL, 10μF, ±20%, 16V
CS33	24203100	EL, 10μF, ±20%, 16V
CS34	24436331	CD, 330pF
CS35	24206229	EL, 2.2μF, ±20%, 50V
CS36	24206229	EL, 2.2μF, ±20%, 50V
CS38	24206229	EL, 2.2μF, ±20%, 50V
CS51	24206229	EL, 2.2μF, ±20%, 50V
CS52	24206229	EL, 2.2μF, ±20%, 50V
CS53	24206229	EL, 2.2μF, ±20%, 50V
CS54	24206229	EL, 2.2μF, ±20%, 50V
CS55	24436331	CD, 330pF
CS56	24436331	CD, 330pF
CS57	24436331	CD, 330pF

Location No.	Part No.	Description
CS58	24436331	CD, 330pF
CV01	24085981	EL, 10μF, ±20%, 16V, Non-Polar
CV02	24232103	CD, 0.01μF, +80%, -20%
CV03	24085981	EL, 10μF, ±20%, 16V, Non-Polar
CV04	24203100	EL, 10μF, ±20%, 16V
CV05	24203100	EL, 10μF, ±20%, 16V
CV08	24666102	EL, 1000μF, ±20%, 16V
CV10	24203100	EL, 10μF, ±20%, 16V
CV13	24794100	EL, 10μF, ±20%, 16V (40H80)
CV14	24232103	CD, 0.01μF, +80%, -20% (40H80)
CV15	24232103	CD, 0.01μF, +80%, -20% (40H80)
CV17	24203100	EL, 10μF, ±20%, 16V
CV21	24203100	EL, 10μF, ±20%, 16V
CV22	24203100	EL, 10μF, +20%, 16V
CV23	24232103	CD, 0.01μF, +80%, -20%
CV24	24212102	CD, 1000pF, ±10%
CV27	24762471	EL, 470μF, ±20%, 10V
CV29	24763101	EL, 100μF, ±20%, 16V
CV30	24232103	CD, 0.01μF, +80%, -20%
CV38	24203101	EL, 100μF, ±20%, 16V
CV39	24212102	CD, 1000pF, ±10%
CV40	24763101	EL, 100μF, ±20%, 16V
CV41	24232103	CD, 0.01μF, +80%, -20%
CV46	24232103	CD, 0.01μF, +80%, -20%
CV60	24203470	EL, 47μF, ±20%, 16V
CV61	24203470	EL, 47μF, ±20%, 16V
CV62	24232103	CD, 0.01μF, +80%, -20%
CV63	24109103	Chip, 0.01μF, ±10%, 25V
CV64	24206100	EL, 10μF, ±20%, 50V
CV65	24591122	PF, 1200pF
CV66	24436561	CD, 560pF
CV67	24591102	PF, 1000pF
CV68	24206010	EL, 1μF, ±20%, 50V
CV78	24109103	Chip, 0.01μF, ±10%, 25V
CV100	24206229	EL, 2.2μF, +20%, 50V
CV100	24206229	EL, 2.2μF, ±20%, 50V
CV120	24794100	EL, 10μF, ±20%, 16V (56H80)
CV121	24232103	CD, 0.01μF, +80%, -20% (56H80)
CV122	24232103	CD, 0.01μF, +80%, -20% (56H80)
CV135	24203470	EL, 47μF, ±20%, 16V
CV136	24203470	EL, 47μF, ±20%, 16V
CV137	24203470	EL, 47μF, ±20%, 16V
CV138	24203470	EL, 47μF, ±20%, 16V
CV501	24203101	EL, 100μF, ±20%, 16V
CV503	24203100	EL, 10μF, ±20%, 16V
CV505	24109103	Chip, 0.01μF, ±10%, 25V
CW08	24794101	EL, 100μF, ±20%, 16V
CW09	24109103	Chip, 0.01μF, ±10%, 25V
CX11	24667470	EL, 47μF, ±20%, 25V
CX13	24669470	EL, 47μF, ±20%, 50V
CX102	24092441	Chip, 1μF, +80%, -20%, 16V
CX103	24203330	EL, 33μF, ±20%, 16V
CX104	24092441	Chip, 1μF, +80%, -20%, 16V
CX105	24666101	EL, 100μF, ±20%, 16V
CX106	24105181	Chip, 180pF
CX107	24105820	Chip, 820pF
CX108	24105121	Chip, 120pF
CX109	24100104	Chip, 0.1μF, +80%, -20%, 25V

Location No.	Part No.	Description
CX112	24100333	Chip, 0.033μF, +80%, -20%, 25V
CX113	24100104	Chip, 0.1μF, +80%, -20%, 25V
CX114	24100104	Chip, 0.1μF, +80%, -20%, 25V
CX115	24202220	EL, 22μF, ±20%, 10V
CX116	24100104	Chip, 0.1μF, +80%, -20%, 25V
CX132	24092441	Chip, 1μF, +80%, -20%, 16V
CX133	24203330	EL, 33μF, ±20%, 16V
CX134	24092441	Chip, 1μF, +80%, -20%, 16V
CX136	24105121	Chip, 120pF
CX137	24105151	Chip, 150pF
CX138	24105471	Chip, 470pF
CX142	24092616	Chip, 0.33μF, ±10%, 16V
CX145	24202220	EL, 22μF, ±20%, 10V
CX146	24100104	Chip, 0.1μF, +80%, -20%, 25V
CX162	24092441	Chip, 1μF, +80%, -20%, 16V
CX163	24203330	EL, 33μF, ±20%, 16V
CX164	24092441	Chip, 1μF, +80%, -20%, 16V
CX166	24105121	Chip, 120pF
CX167	24105151	Chip, 150pF
CX168	24105331	Chip, 330pF
CX172	24092616	Chip, 0.33μF, ±10%, 16V
CX175	24202220	EL, 22μF, ±20%, 10V
CX176	24100104	Chip, 0.1μF, +80%, -20%, 25V
CX191	24100104	Chip, 0.1μF, +80%, -20%, 25V
CX192	24100104	Chip, 0.1μF, +80%, -20%, 25V
CX193	24100104	Chip, 0.1μF, +80%, -20%, 25V
CX195	24105100	Chip, 10pF, ±0.5pF
CX196	24105100	Chip, 10pF, ±0.5pF
CX211	24092538	Chip, 1μF, +80%, -20%, 10V
CX222	24100104	Chip, 0.1μF, +80%, -20%, 25V
CX223	24669010	EL, 1μF, ±20%, 50V
CX224	24109103	Chip, 0.01μF, ±10%, 25V
CX225	24100104	Chip, 0.1μF, +80%, -20%, 25V
CX226	24100104	Chip, 0.1μF, +80%, -20%, 25V
CX242	24100104	Chip, 0.1μF, +80%, -20%, 25V
CX243	24666100	EL, 10μF, ±20%, 16V
CX244	24092730	Chip, 0.1μF, ±10%, 16V
CX245	24100104	Chip, 0.1μF, +80%, -20%, 25V
CX246	24100104	Chip, 0.1μF, +80%, -20%, 25V
CX301	24763221	EL, 220μF, ±20%, 16V
CX303	24100104	Chip, 0.1μF, +80%, -20%, 25V
CX306	24100104	Chip, 0.1μF, +80%, -20%, 25V
CX311	24100104	Chip, 0.1μF, +80%, -20%, 25V
CX313	24100104	Chip, 0.1μF, +80%, -20%, 25V
CX315	24100104	Chip, 0.1μF, +80%, -20%, 25V
CX317	24100104	Chip, 0.1μF, +80%, -20%, 25V
CX319	24100104	Chip, 0.1μF, +80%, -20%, 25V
CX320	24100104	Chip, 0.1μF, +80%, -20%, 25V
CX321	24100104	Chip, 0.1μF, +80%, -20%, 25V
CX322	24100104	Chip, 0.1μF, +80%, -20%, 25V
CX323	24092538	Chip, 1μF, +80%, -20%, 10V
CX326	24092538	Chip, 1μF, +80%, -20%, 10V
CX327	24105470	Chip, 47pF
CX328	24092730	Chip, 0.1μF, ±10%, 16V
CX329	24092730	Chip, 0.1μF, ±10%, 16V
CX331	24092538	Chip, 1μF, +80%, -20%, 10V
CX332	24105330	Chip, 33pF
CX333	24092730	Chip, 0.1μF, ±10%, 16V
CX334	24092730	Chip, 0.1μF, ±10%, 16V
CX341	24100104	Chip, 0.1μF, +80%, -20%, 25V
CX342	24092730	Chip, 0.1μF, ±10%, 16V
CX343	24100104	Chip, 0.1μF, +80%, -20%, 25V
CX344	24092730	Chip, 0.1μF, ±10%, 16V

Location No.	Part No.	Description
CX345	24100104	Chip, 0.1μF, +80%, -20%, 25V
CX346	24092730	Chip, 0.1μF, ±10%, 16V
CX354	24100104	Chip, 0.1μF, +80%, -20%, 25V
CX361	24766470	EL, 47μF, ±20%, 50V
CX364	24100104	Chip, 0.1μF, +80%, -20%, 25V
CX366	24100104	Chip, 0.1μF, +80%, -20%, 25V
CX368	24100104	Chip, 0.1μF, +80%, -20%, 25V
CX372	24100104	Chip, 0.1μF, +80%, -20%, 25V
CX399	24100104	Chip, 0.1μF, +80%, -20%, 25V
CX471	24100104	Chip, 0.1μF, +80%, -20%, 25V
CX473	24092538	Chip, 1μF, +80%, -20%, 10V
CX521	24105820	Chip, 820pF
CX522	24105560	Chip, 56pF
CX523	24105270	Chip, 27pF
CX531	24105101	Chip, 100pF
CX532	24105330	Chip, 33pF
CX541	24105101	Chip, 100pF
CX542	24105330	Chip, 33pF
CX562	24100104	Chip, 0.1μF, +80%, -20%, 25V
CX564	24100104	Chip, 0.1μF, +80%, -20%, 25V
CX811	24105330	Chip, 33pF
CX812	24105330	Chip, 33pF
CX821	24105101	Chip, 100pF
CX822	24105101	Chip, 100pF
CX823	24105101	Chip, 100pF
CX824	24105221	Chip, 220pF
CX825	24105221	Chip, 220pF
CX826	24105221	Chip, 220pF
CX827	24105221	Chip, 220pF
CX829	24105221	Chip, 220pF
CX844	24105221	Chip, 220pF
CX845	24105221	Chip, 220pF
CX891	24100104	Chip, 0.1μF, +80%, -20%, 25V
CX904	24109103	Chip, 0.01μF, ±10%, 25V
CY21	24100104	Chip, 0.1μF, +80%, -20%, 25V
CY22	24100104	Chip, 0.1μF, +80%, -20%, 25V
CY23	24763221	EL, 220μF, ±20%, 16V
CY24	24100104	Chip, 0.1μF, +80%, -20%, 25V
CY25	24100104	Chip, 0.1μF, +80%, -20%, 25V
CY26	24100104	Chip, 0.1μF, +80%, -20%, 25V
CY27	24092730	Chip, 0.1μF, ±10%, 16V
CY28	24092730	Chip, 0.1μF, ±10%, 16V
CY29	24092730	Chip, 0.1μF, ±10%, 16V
CY32	24762102	EL, 1000μF, ±20%, 10V
CY33	24100104	Chip, 0.1μF, +80%, -20%, 25V
CY35	24100104	Chip, 0.1μF, +80%, -20%, 25V
CY36	24108120	Chip, 12pF
CY37	24108120	Chip, 12pF
CY38	24108120	Chip, 12pF
CY39	24206228	EL, 0.22μF, ±20%, 50V
CY40	24109222	Chip, 2200pF, ±10%
CY40	24206100	EL, 10μF, ±20%, 50V
CY41	24109103	Chip, 0.01μF, ±10%, 25V
CY42	24206229	EL, 2.2μF, ±20%, 50V
CY43	24092463	Chip, 0.22μF, ±10%, 16V
CY44	24206229	EL, 2.2μF, ±20%, 50V
CY45	24109223	Chip, 0.022μF, ±10%, 25V
CY105	24108221	Chip, 220pF
CY120	24092538	Chip, 1μF, +80%, -20%, 10V
CY121	24108101	Chip, 100pF
CY122	24092538	Chip, 1μF, +80%, -20%, 10V
CY132	24092730	Chip, 0.1μF, ±10%, 16V
CY133	24092730	Chip, 0.1μF, ±10%, 16V
CY134	24092730	Chip, 0.1μF, ±10%, 16V

Location No.	Part No.	Description
CY149	24108330	Chip, 33pF
CY155	24792101	EL, 100μF, ±20%, 6.3V
CY157	24108330	Chip, 33pF
CY158	24108330	Chip, 33pF
CY160	24092538	Chip, 1μF, +80%, -20%, 10V
CY162	24092538	Chip, 1μF, +80%, -20%, 10V
CY163	24092538	Chip, 1μF, +80%, -20%, 10V
CY164	24092538	Chip, 1μF, +80%, -20%, 10V
CY165	24092538	Chip, 1μF, +80%, -20%, 10V
CY166	24202221	EL, 220μF, ±20%, 10V
CY167	24092538	Chip, 1μF, +80%, -20%, 10V
CY168	24092538	Chip, 1μF, +80%, -20%, 10V
CY169	24092538	Chip, 1μF, +80%, -20%, 10V
CY170	24100104	Chip, 0.1μF, +80%, -20%, 25V
CY171	24100104	Chip, 0.1μF, +80%, -20%, 25V
CY172	24100104	Chip, 0.1μF, +80%, -20%, 25V
CY173	24100104	Chip, 0.1μF, +80%, -20%, 25V
CY174	24100104	Chip, 0.1μF, +80%, -20%, 25V
CY175	24100104	Chip, 0.1μF, +80%, -20%, 25V
CY176	24100104	Chip, 0.1μF, +80%, -20%, 25V
CY177	24100104	Chip, 0.1μF, +80%, -20%, 25V
CY178	24100104	Chip, 0.1μF, +80%, -20%, 25V
CY179	24100104	Chip, 0.1μF, +80%, -20%, 25V
CY180	24100104	Chip, 0.1μF, +80%, -20%, 25V
CY181	24100104	Chip, 0.1μF, +80%, -20%, 25V
CY182	24100104	Chip, 0.1μF, +80%, -20%, 25V
CY183	24100104	Chip, 0.1μF, +80%, -20%, 25V
CY184	24100104	Chip, 0.1μF, +80%, -20%, 25V
CY185	24761471	EL, 470μF, ±20%, 6.3V
CY186	24100104	Chip, 0.1μF, +80%, -20%, 25V
CY189	24092293	Chip, 0.1μF, +80%, -20%, 25V
CY202	24092730	Chip, 0.1μF, ±10%, 16V
CY203	24092730	Chip, 0.1μF, ±10%, 16V
CY204	24092730	Chip, 0.1μF, ±10%, 16V
CY205	24108101	Chip, 100pF
CY206	24100104	Chip, 0.1μF, +80%, -20%, 25V
CY207	24202101	EL, 100μF, ±20%, 10V
CY251	24109472	Chip, 4700pF, ±10%
CY252	24109472	Chip, 4700pF, ±10%
CY253	24109472	Chip, 4700pF, ±10%
CY254	24109472	Chip, 4700pF, ±10%
CY255	24109472	Chip, 4700pF, ±10%
CY256	24109472	Chip, 4700pF, ±10%
CY257	24100104	Chip, 0.1μF, +80%, -20%, 25V
CY300	24201101	EL, 100μF, 6.3V
CY301	24092538	Chip, 1μF, +80%, -20%, 10V
CY304	24203100	EL, 10μF, ±20%, 16V
CY305	24092730	Chip, 0.1μF, ±10%, 16V
CY307	24108330	Chip, 33pF
CY308	24100104	Chip, 0.1μF, +80%, -20%, 25V
CY330	24201101	EL, 100μF, 6.3V
CY331	24092538	Chip, 1μF, +80%, -20%, 10V
CY332	24092538	Chip, 1μF, +80%, -20%, 10V
CY333	24201101	EL, 100μF, 6.3V
CY334	24203100	EL, 10μF, ±20%, 16V
CY335	24092730	Chip, 0.1μF, ±10%, 16V
CY337	24108330	Chip, 33pF
CY338	24100104	Chip, 0.1μF, +80%, -20%, 25V
CY339	24100104	Chip, 0.1μF, +80%, -20%, 25V
CY340	24201101	EL, 100μF, 6.3V
CY341	24092538	Chip, 1μF, +80%, -20%, 10V
CY344	24203100	EL, 10μF, ±20%, 16V
CY345	24092730	Chip, 0.1μF, ±10%, 16V
CY347	24108330	Chip, 33pF

Location No.	Part No.	Description
CY348	24100104	Chip, 0.1μF, +80%, -20%, 25V
CY439	24108330	Chip, 33pF
CY440	24108330	Chip, 33pF
CY501	24203101	EL, 100μF, ±20%, 16V
CY502	24203100	EL, 10μF, ±20%, 16V
CY505	24109103	Chip, 0.01μF, ±10%, 25V
CY511	24108101	Chip, 100pF
CY515	24092730	Chip, 0.1μF, ±10%, 16V
CY519	24092730	Chip, 0.1μF, ±10%, 16V
CY671	24092730	Chip, 0.1μF, ±10%, 16V
CY672	24092730	Chip, 0.1μF, ±10%, 16V
CY673	24761471	EL, 470μF, ±20%, 6.3V
CY674	24092730	Chip, 0.1μF, ±10%, 16V
CY675	24092730	Chip, 0.1μF, ±10%, 16V
CY702	24092730	Chip, 0.1μF, ±10%, 16V
CY703	24092730	Chip, 0.1μF, ±10%, 16V
CY711	24092730	Chip, 0.1μF, ±10%, 16V
CY712	24092730	Chip, 0.1μF, ±10%, 16V
CY713	24092730	Chip, 0.1μF, ±10%, 16V
CY720	24092730	Chip, 0.1μF, ±10%, 16V
CY721	24092730	Chip, 0.1μF, ±10%, 16V
CY722	24092730	Chip, 0.1μF, ±10%, 16V
CY733	24092730	Chip, 0.1μF, ±10%, 16V
CY803	24092730	Chip, 0.1μF, ±10%, 16V
CY804	24092730	Chip, 0.1μF, ±10%, 16V
CY806	24100104	Chip, 0.1μF, +80%, -20%, 25V
CY807	24092538	Chip, 1μF, +80%, -20%, 10V
CY808	24100104	Chip, 0.1μF, +80%, -20%, 25V
CY813	24092538	Chip, 1μF, +80%, -20%, 10V
CY822	24108330	Chip, 33pF
CY825	24092538	Chip, 1μF, +80%, -20%, 10V
CY826	24108330	Chip, 33pF
CY827	24108330	Chip, 33pF
CY828	24108330	Chip, 33pF
CY829	24108330	Chip, 33pF
CY830	24108330	Chip, 33pF
CY900	24761471	EL, 470μF, ±20%, 6.3V
CY909	24092730	Chip, 0.1μF, ±10%, 16V
CZ02	24100104	Chip, 0.1μF, +80%, -20%, 25V
CZ03	24092730	Chip, 0.1μF, ±10%, 16V
CZ04	24105181	Chip, 180pF
CZ05	24105680	Chip, 68pF
CZ06	24108330	Chip, 33pF
CZ08	24100104	Chip, 0.1μF, +80%, -20%, 25V
CZ09	24109103	Chip, 0.01μF, ±10%, 25V
CZ10	24203101	EL, 100μF, ±20%, 16V
CZ11	24100104	Chip, 0.1μF, +80%, -20%, 25V
CZ12	24105101	Chip, 100pF
CZ13	24105101	Chip, 100pF
CZ14	24108151	Chip, 150pF
CZ27	24092538	Chip, 1μF, +80%, -20%, 10V
CZ28	24109103	Chip, 0.01μF, ±10%, 25V
CZ29	24092538	Chip, 1μF, +80%, -20%, 10V
CZ30	24092730	Chip, 0.1μF, ±10%, 16V
CZ31	24092730	Chip, 0.1μF, ±10%, 16V
CZ32	24100104	Chip, 0.1μF, +80%, -20%, 25V
CZ33	24109102	Chip, 1000pF, ±10%
CZ34	24100104	Chip, 0.1μF, +80%, -20%, 25V
CZ35	24206010	EL, 1μF, ±20%, 50V
CZ36	24761471	EL, 470μF, ±20%, 6.3V
CZ37	24100104	Chip, 0.1μF, +80%, -20%, 25V
CZ38	24100104	Chip, 0.1μF, +80%, -20%, 25V
CZ39	24100104	Chip, 0.1μF, +80%, -20%, 25V
CZ40	24100104	Chip, 0.1μF, +80%, -20%, 25V

Location No.	Part No.	Description
CZ41	24100104	Chip, 0.1μF, +80%, -20%, 25V
CZ42	24100104	Chip, 0.1μF, +80%, -20%, 25V
CZ43	24100104	Chip, 0.1μF, +80%, -20%, 25V
CZ44	24092730	Chip, 0.1μF, ±10%, 16V
CZ45	24100104	Chip, 0.1μF, +80%, -20%, 25V
CZ46	24100104	Chip, 0.1μF, +80%, -20%, 25V
CZ47	24108820	Chip, 82pF
CZ48	24092730	Chip, 0.1μF, ±10%, 16V
CZ49	24092730	Chip, 0.1μF, ±10%, 16V
CZ50	24100104	Chip, 0.1μF, +80%, -20%, 25V
CZ51	24092730	Chip, 0.1μF, ±10%, 16V
CZ52	24092730	Chip, 0.1μF, ±10%, 16V
CZ54	24100104	Chip, 0.1μF, +80%, -20%, 25V
CZ57	24105181	Chip, 180pF
CZ58	24105560	Chip, 56pF
CZ60	24100104	Chip, 0.1μF, +80%, -20%, 25V
CZ77	24092730	Chip, 0.1μF, ±10%, 16V
CZ96	24105270	Chip, 27pF
CZ101	24092441	Chip, 1μF, +80%, -20%, 16V
CZ102	24203101	EL, 100μF, ±20%, 16V
CZ103	24100104	Chip, 0.1μF, +80%, -20%, 25V
CZ104	24109103	Chip, 0.01μF, ±10%, 25V
CZ105	24109103	Chip, 0.01μF, ±10%, 25V
CZ106	24109103	Chip, 0.01μF, ±10%, 25V
CZ108	24100104	Chip, 0.1μF, +80%, -20%, 25V
CZ109	24108101	Chip, 100pF
CZ111	24109103	Chip, 0.01μF, ±10%, 25V
CZ112	24105181	Chip, 180pF
CZ113	24109103	Chip, 0.01μF, ±10%, 25V
CZ114	24109103	Chip, 0.01μF, ±10%, 25V
CZ115	24105390	Chip, 39pF
CZ116	24108470	Chip, 47pF
CZ117	24105680	Chip, 68pF
CZ800	24108330	Chip, 33pF
CZ802	24108330	Chip, 33pF
CZ804	24108330	Chip, 33pF
CZ805	24108330	Chip, 33pF
CZ806	24108330	Chip, 33pF
CZ809	24108330	Chip, 33pF
CZ810	24108330	Chip, 33pF
CZ811	24108330	Chip, 33pF
CZ812	24108330	Chip, 33pF

RESISTORS

Location No.	Part No.	Description
R101	24383183	OMF, 18k ohm, 2W
R150	24366101	CF, 100 ohm
R151	24366562	CF, 5600 ohm
R152	24366103	CF, 10k ohm
R201	24011101	Chip, 100 ohm, 1/20W
R202	24011471	Chip, 470 ohm, 1/20W
R203	24000445	Chip Jumper, 1680 Type
R204	24000445	Chip Jumper, 1680 Type
R205	24872101	Chip, 100 ohm, 1/16W
R206	24872102	Chip, 1k ohm, 1/16W
R207	24011101	Chip, 100 ohm, 1/20W
R208	24011102	Chip, 1k ohm, 1/20W
R209	24011102	Chip, 1k ohm, 1/20W
R210	24011102	Chip, 1k ohm, 1/20W
R212	24011103	Chip, 10k ohm, 1/20W
R213	24011123	Chip, 12k ohm, 1/20W
R214	24011222	Chip, 2200 ohm, 1/20W
R215	24011101	Chip, 100 ohm, 1/20W
R241	24367223	CF, 22k ohm, ±2%
R242	24367223	CF, 22k ohm, ±2%
R243	24367223	CF, 22k ohm, ±2%
R244	24367223	CF, 22k ohm, ±2%
R245	24367473	CF, 47k ohm, ±2%
R246	24367473	CF, 47k ohm, ±2%
R247	24366474	CF, 470k ohm
R283	24011221	Chip, 220 ohm, 1/20W
R284	24011221	Chip, 220 ohm, 1/20W
R285	24011221	Chip, 220 ohm, 1/20W
R301	24366103	CF, 10k ohm
R302	24366101	CF, 100 ohm
R303	24366102	CF, 1k ohm
R304	24366103	CF, 10k ohm
R305	24366113	CF, 11k ohm
R307	24366471	CF, 470 ohm
R308	24366471	CF, 470 ohm
R310	24366562	CF, 5600 ohm
R312	24366103	CF, 10k ohm
R314	24011101	Chip, 100 ohm, 1/20W
R314	24366473	CF, 47k ohm
R315	24011474	Chip, 470k ohm, 1/20W
R315	24366821	CF, 820 ohm
R316	24366102	CF, 1k ohm
R318	24366153	CF, 15k ohm
R320	24000249	MF, 47k ohm, 1/4W
R321	24366472	CF, 4700 ohm
R322	24000371	MF, 3600 ohm, 1/4W
R323	24000639	MF, 22k ohm, 1/4W
R324	24366103	CF, 10k ohm
R325	24366472	CF, 4700 ohm
R326	24366103	CF, 10k ohm
R327	24366103	CF, 10k ohm
R328	24366123	CF, 12k ohm
R329	24366103	CF, 10k ohm
R330	24019119	MF, 30k ohm, 1/6W
R331	24019119	MF, 30k ohm, 1/6W
R332	24000525	MF, 4700 ohm, 1/4W
R333	24366103	CF, 10k ohm
R334	24872102	Chip, 1k ohm, 1/16W
R335	24872102	Chip, 1k ohm, 1/16W
R336	24872102	Chip, 1k ohm, 1/16W
R337	24321129	MF, 1.2 ohm, 1/2W
R338	24366183	CF, 18k ohm
R339	24366393	CF, 39k ohm
R340	24366824	CF, 820k ohm
R341	24366273	CF, 27k ohm
R342	24366822	CF, 8200 ohm
R343	24366102	CF, 1k ohm
R344	24382151	OMF, 150 ohm, 1W
R345	24322828	MF, 0.82 ohm, 1W
R346	24366100	CF, 10 ohm
R346	24382391	OMF, 390 ohm, 1W
R347	24366103	CF, 10k ohm
R348	24366103	CF, 10k ohm
R349	24366392	CF, 3900 ohm
R350	24366822	CF, 8200 ohm
R351	24366472	CF, 4700 ohm
R351	24872102	Chip, 1k ohm, 1/16W
R352	24872102	Chip, 1k ohm, 1/16W
R353	24872103	Chip, 10k ohm, 1/16W
R354	24872103	Chip, 10k ohm, 1/16W
R355	24872103	Chip, 10k ohm, 1/16W
R357	24872472	Chip, 4700 ohm, 1/16W
R358	24872103	Chip, 10k ohm, 1/16W
R360	24366103	CF, 10k ohm

Location No.	Part No.	Description
R361	24366103	CF, 10k ohm
R362	24366103	CF, 10k ohm
R363	24366682	CF, 6800 ohm
R364	24366103	CF, 10k ohm
R370	24366102	CF, 1k ohm
R371	24366823	CF, 82k ohm
R372	24366332	CF, 3300 ohm
R373	24366823	CF, 82k ohm
R374	24366104	CF, 100k ohm
R375	24366153	CF, 15k ohm
R376	24366333	CF, 33k ohm
R378	24366103	CF, 10k ohm
R381	24366103	CF, 10k ohm
R382	24366682	CF, 6800 ohm
R385	24872472	Chip, 4700 ohm, 1/16W
R386	24366103	CF, 10k ohm
R387	24366102	CF, 1k ohm
R401	24011361	Chip, 360 ohm, 1/20W
R402	24011103	Chip, 10k ohm, 1/20W
R403	24011272	Chip, 2700 ohm, 1/20W
R403	24553101	OMF, 100 ohm, 1W
R404	24383101	OMF, 100 ohm, 2W
R406	24382222	OMF, 2200 ohm, 1W
R407	24381100	OMF, 10 ohm, 1/2W
R408	24366101	CF, 100 ohm
R409	24011102	Chip, 1k ohm, 1/20W
R409	24555220	OMF, 22 ohm, 3W
R410	24555220	OMF, 22 ohm, 3W
R411	24323479	MF, 4.7 ohm, 2W
R412	24366101	CF, 100 ohm
R413	24011182	Chip, 1800 ohm, 1/20W
R413	24366272	CF, 2700 ohm
R414	24366101	CF, 100 ohm
R416	24383680	OMF, 68 ohm, 2W (401180)
R417	24366101	CF, 100 ohm
R419	24942102	CC, 1k ohm, 1/2W
R420	24382473	OMF, 47k ohm, 1W
R421	24377224	CF, 220k ohm, 1W
R422	24376104	CF, 100k ohm, 1/2W
R423	24376104	CF, 100k ohm, 1/2W
R424	24338398	MF, 0.39 ohm, 1W
R425	24533102	FR, 1k ohm, 2W
R426	24019254	FR, 10ohm, 1/4W
R427	24942102	CC, 1k ohm, 1/2W
R428	24310109	MF, 1.0 ohm, 1/2W
R430	24383153	OMF, 15k ohm, 2W
R431	24383102	OMF, 1k ohm, 2W
R432	24376274	CF, 270k ohm, 1/2W
R433	24376274	CF, 270k ohm, 1/2W
R434	24376274	CF, 270k ohm, 1/2W
R435	24366101	CF, 100 ohm
R436	24382561	OMF, 560 ohm, 1W
R437	24382561	OMF, 560 ohm, 1W
R438	24382561	OMF, 560 ohm, 1W
R439	24366103	CF, 10k ohm
R440	24366103	CF, 10k ohm
R441	24366474	CF, 470k ohm
R442	24366103	CF, 10k ohm
R443	24366562	CF, 5600 ohm
R444	24366562	CF, 5600 ohm
R445	24366472	CF, 4700 ohm
R446	24366103	CF, 10k ohm
R447	24366152	CF, 1500 ohm
R452	24366103	CF, 10k ohm

Location No.	Part No.	Description
R453	24366472	CF, 4700 ohm
R454	24366562	CF, 5600 ohm
R455	24019259	FR, 27ohm, 1/4W
R456	24366123	CF, 12k ohm
R457	24366472	CF, 4700 ohm
R461	24366102	CF, 1k ohm
R462	24366472	CF, 4700 ohm
R470	24322568	MF, 0.56 ohm, 1W
R471	24552271	OMF, 270 ohm, 1/2W
R473	24366102	CF, 1k ohm
R482	24366331	CF, 330 ohm
R483	24366102	CF, 1k ohm
R484	24366474	CF, 470k ohm
R485	24366103	CF, 10k ohm
R486	24366103	CF, 10k ohm
⚠R487	24000529	MF, 6800 ohm, 1/4W
⚠R488	24000360	MF, 1200ohm, 1/4W
R489	24366222	CF, 2200 ohm
R490	24327223	MF, 22k ohm, ±1%, 1/4W
R491	24366823	CF, 82k ohm
R492	24366392	CF, 3900 ohm
R493	24366224	CF, 220k ohm
⚠R494	24000639	MF, 22k ohm, 1/4W
R495	24366103	CF, 10k ohm
R496	24366223	CF, 22k ohm
R497	24366333	CF, 33k ohm
R498	24872103	Chip, 10k ohm, 1/16W
R499	24366393	CF, 39k ohm
R501	24011303	Chip, 30k ohm, 1/20W
R503	24011103	Chip, 10k ohm, 1/20W
R505	24011152	Chip, 1500 ohm, 1/20W
R506	24011272	Chip, 2700 ohm, 1/20W
R508	24011102	Chip, 1k ohm, 1/20W
R509	24011102	Chip, 1k ohm, 1/20W
R510	24011471	Chip, 470 ohm, 1/20W
R511	24011103	Chip, 10k ohm, 1/20W
R512	24011103	Chip, 10k ohm, 1/20W
R520	24011101	Chip, 100 ohm, 1/20W
R520	24872101	Chip, 100 ohm, 1/16W
R521	24011101	Chip, 100 ohm, 1/20W
R521	24872101	Chip, 100 ohm, 1/16W
R522	24872102	Chip, 1k ohm, 1/16W
R523	24872101	Chip, 100 ohm, 1/16W
R524	24872102	Chip, 1k ohm, 1/16W
R525	24872101	Chip, 100 ohm, 1/16W
R526	24872102	Chip, 1k ohm, 1/16W
R527	24872101	Chip, 100 ohm, 1/16W
R530	24011103	Chip, 10k ohm, 1/20W
R530	24872101	Chip, 100 ohm, 1/16W
R531	24011103	Chip, 10k ohm, 1/20W
R531	24872101	Chip, 100 ohm, 1/16W
R532	24011103	Chip, 10k ohm, 1/20W
R532	24872101	Chip, 100 ohm, 1/16W
R533	24552471	OMF, 470 ohm, 1/2W
R534	24552471	OMF, 470 ohm, 1/2W
R535	24552471	OMF, 470 ohm, 1/2W
R536	24872272	Chip, 2700 ohm, 1/16W
R537	24872472	Chip, 4700 ohm, 1/16W
R538	24872103	Chip, 10k ohm, 1/16W
R539	24552331	OMF, 330 ohm, 1/2W
R540	24872103	Chip, 10k ohm, 1/16W
R562	24872101	Chip, 100 ohm, 1/16W
R601	24872153	Chip, 15k ohm, 1/16W
R602	24872153	Chip, 15k ohm, 1/16W

Location No.	Part No.	Description
R603	24872183	Chip, 18k ohm, 1/16W
R604	24872183	Chip, 18k ohm, 1/16W
R609	24872229	Chip, 2.2 ohm, 1/16W
R610	24872229	Chip, 2.2 ohm, 1/16W
R611	24872562	Chip, 5600 ohm, 1/16W
R612	24872562	Chip, 5600 ohm, 1/16W
R613	24872222	Chip, 2200 ohm, 1/16W
R621	24872101	Chip, 100 ohm, 1/16W
R622	24872105	Chip, 1M ohm, 1/16W
R623	24872101	Chip, 100 ohm, 1/16W
R624	24872101	Chip, 100 ohm, 1/16W
R625	24872101	Chip, 100 ohm, 1/16W
R626	24872101	Chip, 100 ohm, 1/16W
R627	24872101	Chip, 100 ohm, 1/16W
R633	24872101	Chip, 100 ohm, 1/16W
R634	24872101	Chip, 100 ohm, 1/16W
R635	24872101	Chip, 100 ohm, 1/16W
R636	24872101	Chip, 100 ohm, 1/16W
R637	24872101	Chip, 100 ohm, 1/16W
R638	24872101	Chip, 100 ohm, 1/16W
R639	24872101	Chip, 100 ohm, 1/16W
R640	24872101	Chip, 100 ohm, 1/16W
R641	24872101	Chip, 100 ohm, 1/16W
R642	24872101	Chip, 100 ohm, 1/16W
R643	24872101	Chip, 100 ohm, 1/16W
R661	24872101	Chip, 100 ohm, 1/16W
R662	24872332	Chip, 3300 ohm, 1/16W
R663	24872472	Chip, 4700 ohm, 1/16W
R665	24872223	Chip, 22k ohm, 1/16W
R666	24872473	Chip, 47k ohm, 1/16W
R667	24872223	Chip, 22k ohm, 1/16W
R668	24872473	Chip, 47k ohm, 1/16W
R669	24872222	Chip, 2200 ohm, 1/16W
R671	24872101	Chip, 100 ohm, 1/16W
R672	24872332	Chip, 3300 ohm, 1/16W
R673	24872472	Chip, 4700 ohm, 1/16W
R674	24872103	Chip, 10k ohm, 1/16W
R675	24872473	Chip, 47k ohm, 1/16W
R682	24872473	Chip, 47k ohm, 1/16W
R683	24872223	Chip, 22k ohm, 1/16W
R684	24872223	Chip, 22k ohm, 1/16W
R687	24872103	Chip, 10k ohm, 1/16W
R689	24872222	Chip, 2200 ohm, 1/16W
R690	24872103	Chip, 10k ohm, 1/16W
R702	24552221	OMF, 220 ohm, 1/2W
R709	24366563	CF, 56k ohm
R713	24366273	CF, 27k ohm
R715	24366333	CF, 33k ohm
R716	24366223	CF, 22k ohm
R717	24366333	CF, 33k ohm
R718	24366101	CF, 100 ohm
R719	24366100	CF, 10 ohm
R720	24552331	OMF, 330 ohm, 1/2W
R722	24552471	OMF, 470 ohm, 1/2W
R723	24366101	CF, 100 ohm
R724	24366221	CF, 220 ohm
R725	24366182	CF, 1800 ohm
R730	24552100	OMF, 10 ohm, 1/2W
R731	24552331	OMF, 330 ohm, 1/2W
R732	24366470	CF, 47 ohm
R733	24366683	CF, 68k ohm
R734	24366470	CF, 47 ohm
R735	24366683	CF, 68k ohm
R736	24553270	OMF, 27 ohm, 1W

Location No.	Part No.	Description
R737	24366751	CF, 750 ohm
R738	24366102	CF, 1k ohm
R739	24366751	CF, 750 ohm
R740	24553270	OMF, 27 ohm, 1W
R741	24322399	MF, 3.9 ohm, 1W
R742	24321399	MF, 3.9 ohm, 1/2W
R743	24554221	OMF, 220 ohm, 2W
R744	24366122	CF, 1200 ohm
R745	24366122	CF, 1200 ohm
R761	24366273	CF, 27k ohm
R762	24366563	CF, 56k ohm
R763	24552331	OMF, 330 ohm, 1/2W
R764	24366470	CF, 47 ohm
R765	24552100	OMF, 10 ohm, 1/2W
R766	24366470	CF, 47 ohm
R767	24552221	OMF, 220 ohm, 1/2W
R768	24366751	CF, 750 ohm
R769	24366122	CF, 1200 ohm
R770	24553270	OMF, 27 ohm, 1W
R771	24322399	MF, 3.9 ohm, 1W
R772	24366683	CF, 68k ohm
R773	24366683	CF, 68k ohm
R774	24366751	CF, 750 ohm
R775	24366122	CF, 1200 ohm
R776	24553270	OMF, 27 ohm, 1W
R777	24321399	MF, 3.9 ohm, 1/2W
R778	24366102	CF, 1k ohm
R779	24554221	OMF, 220 ohm, 2W
R781	24366273	CF, 27k ohm
R782	24366563	CF, 56k ohm
R783	24552221	OMF, 220 ohm, 1/2W
R784	24552100	OMF, 10 ohm, 1/2W
R785	24366470	CF, 47 ohm
R786	24366751	CF, 750 ohm
R787	24366122	CF, 1200 ohm
R788	24366683	CF, 68k ohm
R789	24366683	CF, 68k ohm
R790	24366751	CF, 750 ohm
R791	24366122	CF, 1200 ohm
R792	24366102	CF, 1k ohm
R793	24321399	MF, 3.9 ohm, 1/2W
R794	24553270	OMF, 27 ohm, 1W
R795	24322399	MF, 3.9 ohm, 1W
R796	24554221	OMF, 220 ohm, 2W
R797	24366470	CF, 47 ohm
R798	24552331	OMF, 330 ohm, 1/2W
R799	24553270	OMF, 27 ohm, 1W
R810	24045006	Cement, 4.7 ohm, 7W
R811	24007061	Cement, 1.8 ohm, ±10%, 2W
R812	24382820	OMF, 82 ohm, 1W
R818	24366683	CF, 68k ohm
R825	24545109	FR, 1 ohm, 1/4W
R827	24366104	CF, 100k ohm
R843	24366473	CF, 47k ohm
R854	24382121	OMF, 120 ohm, 1W
R856	24366152	CF, 1500 ohm
R857	24552682	OMF, 6800 ohm, 1/2W
R858	24366102	CF, 1k ohm
R859	24553333	OMF, 33k ohm, 1W
R860	24554223	OMF, 22k ohm, 2W
R861	24554273	OMF, 27k ohm, 2W
R862	24310689	MF, 6.8 ohm, 1/2W
R863	24366101	CF, 100 ohm
R864	24552102	OMF, 1k ohm, 1/2W

Location No.	Part No.	Description
R865	24552390	OMF, 39 ohm, 1/2W
R866	24366393	CF, 39k ohm
R867	24366102	CF, 1k ohm
R868	24552470	OMF, 47 ohm, 1/2W
R869	24366100	CF, 10 ohm
R870	24381121	OMF, 120 ohm, 1/2W
R871	24382680	OMF, 68 ohm, 1W
R873	24366109	CF, 1 ohm
R892	24366102	CF, 1k ohm
R898	24002000	CC, 3.9M ohm, ±10%, 1/2W
R900	24000961	FR, 2.2 ohm, 2W
R901	24366101	CF, 100 ohm
R902	24366331	CF, 330 ohm
R903	24942102	CC, 1k ohm, 1/2W
R904	24366222	CF, 2200 ohm
R905	24366390	CF, 39 ohm
R906	24366331	CF, 330 ohm
R908	24366470	CF, 47 ohm
R909	24366390	CF, 39 ohm
R910	24322228	MF, 0.22 ohm, 1W
R911	24366101	CF, 100 ohm
R913	24942102	CC, 1k ohm, 1/2W
R914	24366222	CF, 2200 ohm
R915	24366330	CF, 33 ohm
R916	24366331	CF, 330 ohm
R917	24366331	CF, 330 ohm
R918	24366330	CF, 33 ohm
R919	24366330	CF, 33 ohm
R920	24366153	CF, 15k ohm
R921	24366101	CF, 100 ohm
R922	24366331	CF, 330 ohm
R923	24942102	CC, 1k ohm, 1/2W
R924	24366222	CF, 2200 ohm
R925	24366390	CF, 39 ohm
R926	24366331	CF, 330 ohm
R927	24366100	CF, 10 ohm
R928	24366470	CF, 47 ohm
R929	24366390	CF, 39 ohm
R930	24366153	CF, 15k ohm
R931	24383153	OMF, 15k ohm, 2W
R932	24383153	OMF, 15k ohm, 2W
R935	24366820	CF, 82 ohm
R936	24383153	OMF, 15k ohm, 2W
R937	24383153	OMF, 15k ohm, 2W
R938	24366150	CF, 15 ohm
R941	24554153	OMF, 15k ohm, 2W
R942	24554153	OMF, 15k ohm, 2W
R943	24554153	OMF, 15k ohm, 2W
R944	24383153	OMF, 15k ohm, 2W
R945	24366150	CF, 15 ohm
R948	24366562	CF, 5600 ohm
R949	24366153	CF, 15k ohm
R951	24554153	OMF, 15k ohm, 2W
R952	24554153	OMF, 15k ohm, 2W
R953	24554153	OMF, 15k ohm, 2W
R954	24383153	OMF, 15k ohm, 2W
R956	24366101	CF, 100 ohm
R959	24366150	CF, 15 ohm
R961	24366122	CF, 1200 ohm
R962	24366681	CF, 680 ohm
R963	24366222	CF, 2200 ohm
R964	24366272	CF, 2700 ohm
R965	24366471	CF, 470 ohm
R966	24366331	CF, 330 ohm

Location No.	Part No.	Description
R967	24366681	CF, 680 ohm
R968	24366470	CF, 47 ohm
R969	24366683	CF, 68k ohm
R970	24366393	CF, 39k ohm
R971	24367821	CF, 820 ohm, ±2%
R972	24367471	CF, 470 ohm, ±2%
R973	24367681	CF, 680 ohm, ±2%
R974	24367681	CF, 680 ohm, ±2%
R975	24366561	CF, 560 ohm
R976	24367472	CF, 4700 ohm, ±2%
R977	24367512	CF, 5100 ohm, ±2%
R978	24367391	CF, 390 ohm, ±2%
R979	24366272	CF, 2700 ohm
R983	24366681	CF, 680 ohm
R984	24366821	CF, 820 ohm
R985	24366821	CF, 820 ohm
R986	24366821	CF, 820 ohm
R987	24366470	CF, 47 ohm
R991	24366822	CF, 8200 ohm
R992	24366153	CF, 15k ohm
R4005	24366102	CF, 1k ohm
R4006	24366103	CF, 10k ohm
R4007	24366102	CF, 1k ohm
R4008	24366101	CF, 100 ohm
R4009	24366105	CF, 1M ohm
R4010	24366102	CF, 1k ohm
R4011	24366103	CF, 10k ohm
R4012	24366472	CF, 4700 ohm
R4013	24366103	CF, 10k ohm
R4014	24366222	CF, 2200 ohm
R4015	24000633	MF, 10k ohm, 1/4W
R4016	24366105	CF, 1M ohm
R4017	24000631	MF, 8200 ohm, 1/4W
R4020	24000370	MF, 3300 ohm, 1/4W
R4021	24000637	MF, 15k ohm, 1/4W
R4022	24000368	MF, 2700 ohm, 1/4W
R4023	24366472	CF, 4700 ohm
R4025	24000366	MF, 2200 ohm, 1/4W
R4026	24383470	OMF, 47 ohm, 2W
R4030	24366102	CF, 1k ohm
R4031	24366562	CF, 5600 ohm
R4032	24000639	MF, 22k ohm, 1/4W
R4033	24019090	MF, 300k ohm, 1/4W
R4034	24366222	CF, 2200 ohm
R4035	24366103	CF, 10k ohm
R4036	24366102	CF, 1k ohm
R4037	24366182	CF, 1800 ohm
R4044	24000639	MF, 22k ohm, 1/4W
R4051	24000372	MF, 3900 ohm, 1/4W
R4052	24000147	MF, 470 ohm, 1/4W
R4053	24366472	CF, 4700 ohm
R4054	24366472	CF, 4700 ohm
R4055	24066864	VR, 5k ohm, 0.3W
R4056	24000372	MF, 3900 ohm, 1/4W
R4057	24366222	CF, 2200 ohm
R4061	24000529	MF, 6800 ohm, 1/4W
R4062	24000633	MF, 10k ohm, 1/4W
R4402	24011105	Chip, 1M ohm, 1/20W
R4406	24872622	Chip, 6200 ohm, 1/16W
R4407	24872361	Chip, 360 ohm, 1/16W
R4416	24872471	Chip, 470 ohm, 1/16W
R4417	24872471	Chip, 470 ohm, 1/16W
R4420	24872103	Chip, 10k ohm, 1/16W
R4422	24872222	Chip, 2200 ohm, 1/16W

Location No.	Part No.	Description
R4423	24872472	Chip, 4700 ohm, 1/16W
R4424	24872103	Chip, 10k ohm, 1/16W
R4501	24872101	Chip, 100 ohm, 1/16W
R4503	24872102	Chip, 1k ohm, 1/16W
R4504	24872102	Chip, 1k ohm, 1/16W
R4505	24872223	Chip, 22k ohm, 1/16W
R4506	24872103	Chip, 10k ohm, 1/16W
R4507	24872103	Chip, 10k ohm, 1/16W
R4508	24872102	Chip, 1k ohm, 1/16W
R4509	24872561	Chip, 560 ohm, 1/16W
R4510	24872152	Chip, 1500 ohm, 1/16W
R4511	24872102	Chip, 1k ohm, 1/16W
R4512	24872103	Chip, 10k ohm, 1/16W
R4513	24872222	Chip, 2200 ohm, 1/16W
R4514	24872361	Chip, 360 ohm, 1/16W
R4515	24872622	Chip, 6200 ohm, 1/16W
R4516	24872102	Chip, 1k ohm, 1/16W
R4521	24872102	Chip, 1k ohm, 1/16W
R4522	24872102	Chip, 1k ohm, 1/16W
R4523	24872102	Chip, 1k ohm, 1/16W
R4524	24872103	Chip, 10k ohm, 1/16W
R4525	24872103	Chip, 10k ohm, 1/16W
R4526	24872103	Chip, 10k ohm, 1/16W
R4527	24872102	Chip, 1k ohm, 1/16W
R4528	24872102	Chip, 1k ohm, 1/16W
R7701	24872104	Chip, 100k ohm, 1/16W
R7705	24872154	Chip, 150k ohm, 1/16W
R7707	24872472	Chip, 4700 ohm, 1/16W
R7708	24872472	Chip, 4700 ohm, 1/16W
R7710	24384680	OMF, 68 ohm, 3W
R7711	24323129	MF, 1.2 ohm, 2W
R7712	24872472	Chip, 4700 ohm, 1/16W
R7713	24872472	Chip, 4700 ohm, 1/16W
R7715	24384680	OMF, 68 ohm, 3W
R7716	24323129	MF, 1.2 ohm, 2W
R7717	24872472	Chip, 4700 ohm, 1/16W
R7718	24872472	Chip, 4700 ohm, 1/16W
R7720	24384680	OMF, 68 ohm, 3W
R7721	24323129	MF, 1.2 ohm, 2W
R7722	24872473	Chip, 47k ohm, 1/16W
R7723	24872472	Chip, 4700 ohm, 1/16W
R7725	24384680	OMF, 68 ohm, 3W
R7726	24323129	MF, 1.2 ohm, 2W
R7727	24872472	Chip, 4700 ohm, 1/16W
R7728	24872472	Chip, 4700 ohm, 1/16W
R7730	24384680	OMF, 68 ohm, 3W
R7731	24323129	MF, 1.2 ohm, 2W
R7732	24872473	Chip, 47k ohm, 1/16W
R7733	24872472	Chip, 4700 ohm, 1/16W
R7735	24384680	OMF, 68 ohm, 3W
R7736	24323129	MF, 1.2 ohm, 2W
R7741	24872471	Chip, 470 ohm, 1/16W
R7742	24872222	Chip, 2200 ohm, 1/16W
R7743	24872223	Chip, 22k ohm, 1/16W
R7744	24872102	Chip, 1k ohm, 1/16W
R7745	24872222	Chip, 2200 ohm, 1/16W
R7746	24872223	Chip, 22k ohm, 1/16W
R7747	24872222	Chip, 2200 ohm, 1/16W
R7749	24872331	Chip, 330 ohm, 1/16W
R7750	24323228	MF, 0.22 ohm, 2W
R7751	24872471	Chip, 470 ohm, 1/16W
R7757	24872223	Chip, 22k ohm, 1/16W
R7758	24872222	Chip, 2200 ohm, 1/16W
R7760	24872103	Chip, 10k ohm, 1/16W

Location No.	Part No.	Description
R7761	24872333	Chip, 33k ohm, 1/16W
R7762	24872103	Chip, 10k ohm, 1/16W
R7763	24872471	Chip, 470 ohm, 1/16W
R7764	24872331	Chip, 330 ohm, 1/16W
R7765	24323338	MF, 0.33 ohm, 2W
R7766	24872223	Chip, 22k ohm, 1/16W
R7767	24872153	Chip, 15k ohm, 1/16W
R7775	24872273	Chip, 27k ohm, 1/16W
R7776	24872472	Chip, 4700 ohm, 1/16W
R7777	24872273	Chip, 27k ohm, 1/16W
R7778	24872472	Chip, 4700 ohm, 1/16W
R7779	24872102	Chip, 1k ohm, 1/16W
R7780	24872102	Chip, 1k ohm, 1/16W
R7781	24872333	Chip, 33k ohm, 1/16W
R7793	24872153	Chip, 15k ohm, 1/16W
R7797	24872472	Chip, 4700 ohm, 1/16W
R7798	24872103	Chip, 10k ohm, 1/16W
R7799	24872222	Chip, 2200 ohm, 1/16W
R7864	24872221	Chip, 220 ohm, 1/16W
R7865	24872332	Chip, 3300 ohm, 1/16W
R7866	24872332	Chip, 3300 ohm, 1/16W
R7867	24872332	Chip, 3300 ohm, 1/16W
R7872	24872474	Chip, 470k ohm, 1/16W
R7873	24872332	Chip, 3300 ohm, 1/16W
R7880	24872221	Chip, 220 ohm, 1/16W
R7881	24872472	Chip, 4700 ohm, 1/16W
R7882	24872103	Chip, 10k ohm, 1/16W
R7883	24872103	Chip, 10k ohm, 1/16W
R7884	24872103	Chip, 10k ohm, 1/16W
R7885	24872103	Chip, 10k ohm, 1/16W
R7886	24872224	Chip, 220k ohm, 1/16W
R7887	24872562	Chip, 5600 ohm, 1/16W
R7890	24872471	Chip, 470 ohm, 1/16W
R7891	24872471	Chip, 470 ohm, 1/16W
R9501	24366470	CF, 47 ohm
R9502	24366470	CF, 47 ohm
R9503	24366681	CF, 680 ohm
R9504	24366683	CF, 68k ohm
R9505	24366393	CF, 39k ohm
R9506	24366681	CF, 680 ohm
R9601	24366121	CF, 120 ohm
R9602	24366622	CF, 6200 ohm
R9603	24366392	CF, 3900 ohm
R9604	24366272	CF, 2700 ohm
R9605	24366682	CF, 6800 ohm
R9606	24366202	CF, 2k ohm
R9607	24366470	CF, 47 ohm
R9608	24366681	CF, 680 ohm
R9609	24366683	CF, 68k ohm
R9610	24366393	CF, 39k ohm
R9611	24366681	CF, 680 ohm
R9612	24366470	CF, 47 ohm
R9613	24366270	CF, 27 ohm
R9614	24366360	CF, 36 ohm
R9701	24366103	CF, 10k ohm
R9702	24366103	CF, 10k ohm
R9703	24366103	CF, 10k ohm
R9705	24366822	CF, 8200 ohm
R9706	24366682	CF, 6800 ohm
R9707	24366391	CF, 390 ohm
R9708	24366152	CF, 1500 ohm
R9709	24366271	CF, 270 ohm
R9710	24366272	CF, 2700 ohm
R9711	24366472	CF, 4700 ohm

Location No.	Part No.	Description
R9712	24366272	CF, 2700 ohm
R9713	24366102	CF, 1k ohm
R9714	24366102	CF, 1k ohm
R9715	24366102	CF, 1k ohm
RA01	24872102	Chip, 1k ohm, 1/16W
RA02	24872101	Chip, 100 ohm, 1/16W
RA03	24872101	Chip, 100 ohm, 1/16W
RA04	24872102	Chip, 1k ohm, 1/16W
RA05	24872102	Chip, 1k ohm, 1/16W
RA06	24872102	Chip, 1k ohm, 1/16W
RA07	24872102	Chip, 1k ohm, 1/16W
RA08	24872102	Chip, 1k ohm, 1/16W
RA09	24872102	Chip, 1k ohm, 1/16W
RA10	24872102	Chip, 1k ohm, 1/16W
RA11	24872102	Chip, 1k ohm, 1/16W
RA12	24872102	Chip, 1k ohm, 1/16W
RA13	24872102	Chip, 1k ohm, 1/16W
RA14	24872103	Chip, 10k ohm, 1/16W
RA15	24872102	Chip, 1k ohm, 1/16W
RA16	24872102	Chip, 1k ohm, 1/16W
RA17	24872102	Chip, 1k ohm, 1/16W
RA18	24872103	Chip, 10k ohm, 1/16W
RA19	24872102	Chip, 1k ohm, 1/16W
RA26	24872101	Chip, 100 ohm, 1/16W
RA27	24872101	Chip, 100 ohm, 1/16W
RA29	24872102	Chip, 1k ohm, 1/16W
RA30	24872102	Chip, 1k ohm, 1/16W
RA31	24872102	Chip, 1k ohm, 1/16W
RA32	24872102	Chip, 1k ohm, 1/16W
RA33	24872102	Chip, 1k ohm, 1/16W
RA34	24872102	Chip, 1k ohm, 1/16W
RA35	24872102	Chip, 1k ohm, 1/16W
RA36	24872471	Chip, 470 ohm, 1/16W
RA39	24872102	Chip, 1k ohm, 1/16W
RA46	24872332	Chip, 3300 ohm, 1/16W
RA47	24872332	Chip, 3300 ohm, 1/16W
RA48	24872101	Chip, 100 ohm, 1/16W
RA49	24872332	Chip, 3300 ohm, 1/16W
RA50	24872682	Chip, 6800 ohm, 1/16W
RA51	24872151	Chip, 150 ohm, 1/16W
RA52	24872103	Chip, 10k ohm, 1/16W
RA54	24872332	Chip, 3300 ohm, 1/16W
RA55	24872102	Chip, 1k ohm, 1/16W
RA56	24872102	Chip, 1k ohm, 1/16W
RA59	24872101	Chip, 100 ohm, 1/16W
RA60	24872101	Chip, 100 ohm, 1/16W
RA61	24872103	Chip, 10k ohm, 1/16W
RA71	24366683	CF, 68k ohm (40H80)
RA71	24872102	Chip, 1k ohm, 1/16W
RA72	24366223	CF, 22k ohm (40H80)
RA72	24872332	Chip, 3300 ohm, 1/16W
RA73	24366103	CF, 10k ohm (40H80)
RA73	24872332	Chip, 3300 ohm, 1/16W
RA74	24872153	Chip, 15k ohm, 1/16W
RA75	24872153	Chip, 15k ohm, 1/16W
RA76	24366822	CF, 8200 ohm (40H80)
RA76	24872103	Chip, 10k ohm, 1/16W
RA77	24366153	CF, 15k ohm (40H80)
RA77	24872103	Chip, 10k ohm, 1/16W
RA78	24366273	CF, 27k ohm (40H80)
RA78	24872333	Chip, 33k ohm, 1/16W
RA79	24366823	CF, 82k ohm (40H80)
RA79	24872333	Chip, 33k ohm, 1/16W
RA80	24872101	Chip, 100 ohm, 1/16W

Location No.	Part No.	Description
RA81	24366683	CF, 68k ohm (56H80)
RA82	24366223	CF, 22k ohm (56H80)
RA83	24366103	CF, 10k ohm (56H80)
RA86	24366822	CF, 8200 ohm (56H80)
RA87	24366153	CF, 15k ohm (56H80)
RA88	24366273	CF, 27k ohm (56H80)
RB01	24366271	CF, 270 ohm (40H80)
RB01	24872101	Chip, 100 ohm, 1/16W
RB02	24872101	Chip, 100 ohm, 1/16W
RB03	24872101	Chip, 100 ohm, 1/16W
RB04	24366103	CF, 10k ohm (40H80)
RB09	24872103	Chip, 10k ohm, 1/16W
RB10	24872101	Chip, 100 ohm, 1/16W
RB11	24366271	CF, 270 ohm (56H80)
RB11	24872101	Chip, 100 ohm, 1/16W
RB12	24872101	Chip, 100 ohm, 1/16W
RB13	24872103	Chip, 10k ohm, 1/16W
RB14	24366103	CF, 10k ohm (56H80)
RB14	24872153	Chip, 15k ohm, 1/16W
RB15	24366471	CF, 470 ohm
RB15	24872153	Chip, 15k ohm, 1/16W
RB16	24872332	Chip, 3300 ohm, 1/16W
RB17	24872332	Chip, 3300 ohm, 1/16W
RB19	24366470	CF, 47 ohm
RB33	24872102	Chip, 1k ohm, 1/16W
RB37	24872101	Chip, 100 ohm, 1/16W
RB38	24872101	Chip, 100 ohm, 1/16W
RB41	24366151	CF, 150 ohm
RB41	24366273	CF, 27k ohm
RB42	24366153	CF, 15k ohm
RB43	24872473	Chip, 47k ohm, 1/16W
RB61	24872222	Chip, 2200 ohm, 1/16W
RB62	24872103	Chip, 10k ohm, 1/16W
RB65	24872392	Chip, 3900 ohm, 1/16W
RB90	24872392	Chip, 3900 ohm, 1/16W
RB91	24872473	Chip, 47k ohm, 1/16W
RB92	24872273	Chip, 27k ohm, 1/16W
RB93	24872273	Chip, 27k ohm, 1/16W
RB94	24872222	Chip, 2200 ohm, 1/16W
RB95	24872222	Chip, 2200 ohm, 1/16W
RB96	24872273	Chip, 27k ohm, 1/16W
RB97	24872273	Chip, 27k ohm, 1/16W
RB98	24872102	Chip, 1k ohm, 1/16W
RD02	24366101	CF, 100 ohm
RD03	24366101	CF, 100 ohm
RD05	24366432	CF, 4300 ohm
RD06	24366102	CF, 1k ohm
RD07	24366114	CF, 110k ohm
RD08	24366132	CF, 1300 ohm
RD09	24366473	CF, 47k ohm
RD10	24366513	CF, 51k ohm
RD11	24366392	CF, 3900 ohm
RD12	24366101	CF, 100 ohm
RD14	24366101	CF, 100 ohm
RD19	24366101	CF, 100 ohm
RD20	24366101	CF, 100 ohm
RD21	24366122	CF, 1200 ohm
RD22	24366821	CF, 820 ohm
RD23	24366152	CF, 1500 ohm
RD24	24366681	CF, 680 ohm
RH002	24872473	Chip, 47k ohm, 1/16W
RH003	24872473	Chip, 47k ohm, 1/16W
RH004	24872221	Chip, 220 ohm, 1/16W
RH005	24872221	Chip, 220 ohm, 1/16W

Location No.	Part No.	Description
RH006	24872221	Chip, 220 ohm, 1/16W
RH007	24872221	Chip, 220 ohm, 1/16W
RH008	24872221	Chip, 220 ohm, 1/16W
RH009	24872103	Chip, 10k ohm, 1/16W
RH041	24872101	Chip, 100 ohm, 1/16W
RH042	24872101	Chip, 100 ohm, 1/16W
RH043	24872101	Chip, 100 ohm, 1/16W
RH044	24872101	Chip, 100 ohm, 1/16W
RH045	24872101	Chip, 100 ohm, 1/16W
RH046	24872101	Chip, 100 ohm, 1/16W
RH047	24872101	Chip, 100 ohm, 1/16W
RH048	24872101	Chip, 100 ohm, 1/16W
RH051	24872222	Chip, 2200 ohm, 1/16W
RH061	24872561	Chip, 560 ohm, 1/16W
RH062	24872102	Chip, 1k ohm, 1/16W
RH063	24872103	Chip, 10k ohm, 1/16W
RH064	24872103	Chip, 10k ohm, 1/16W
RH170	24872122	Chip, 1200 ohm, 1/16W
RH171	24872122	Chip, 1200 ohm, 1/16W
RH172	24872122	Chip, 1200 ohm, 1/16W
RH173	24872122	Chip, 1200 ohm, 1/16W
RH174	24872122	Chip, 1200 ohm, 1/16W
RH175	24872122	Chip, 1200 ohm, 1/16W
RH176	24872122	Chip, 1200 ohm, 1/16W
RH177	24872122	Chip, 1200 ohm, 1/16W
RH178	24872122	Chip, 1200 ohm, 1/16W
RH179	24872122	Chip, 1200 ohm, 1/16W
RH180	24872122	Chip, 1200 ohm, 1/16W
RH181	24872122	Chip, 1200 ohm, 1/16W
RH182	24872122	Chip, 1200 ohm, 1/16W
RH183	24872122	Chip, 1200 ohm, 1/16W
RH184	24872122	Chip, 1200 ohm, 1/16W
RH185	24872122	Chip, 1200 ohm, 1/16W
RH186	24872122	Chip, 1200 ohm, 1/16W
RH187	24872122	Chip, 1200 ohm, 1/16W
RH188	24872122	Chip, 1200 ohm, 1/16W
RH189	24872122	Chip, 1200 ohm, 1/16W
RH190	24872122	Chip, 1200 ohm, 1/16W
RH191	24872122	Chip, 1200 ohm, 1/16W
RH192	24872122	Chip, 1200 ohm, 1/16W
RH193	24872122	Chip, 1200 ohm, 1/16W
RH194	24872122	Chip, 1200 ohm, 1/16W
RH195	24872122	Chip, 1200 ohm, 1/16W
RH196	24872122	Chip, 1200 ohm, 1/16W
RH197	24872122	Chip, 1200 ohm, 1/16W
RH198	24872122	Chip, 1200 ohm, 1/16W
RH199	24872122	Chip, 1200 ohm, 1/16W
RH201	24872472	Chip, 4700 ohm, 1/16W
RH202	24872472	Chip, 4700 ohm, 1/16W
RH205	24872472	Chip, 4700 ohm, 1/16W
RH206	24872472	Chip, 4700 ohm, 1/16W
RH207	24872331	Chip, 330 ohm, 1/16W
RH208	24872221	Chip, 220 ohm, 1/16W
RH209	24872102	Chip, 1k ohm, 1/16W
RH210	24872102	Chip, 1k ohm, 1/16W
RH211	24872473	Chip, 47k ohm, 1/16W
RH212	24872473	Chip, 47k ohm, 1/16W
RH213	24872103	Chip, 10k ohm, 1/16W
RR08	24872102	Chip, 1k ohm, 1/16W
RR09	24872102	Chip, 1k ohm, 1/16W
RR10	24872102	Chip, 1k ohm, 1/16W
RR11	24872101	Chip, 100 ohm, 1/16W
RR12	24872101	Chip, 100 ohm, 1/16W
RR13	24872101	Chip, 100 ohm, 1/16W

Location No.	Part No.	Description
RR14	24872103	Chip, 10k ohm, 1/16W
RR15	24872151	Chip, 150 ohm, 1/16W
RR16	24872151	Chip, 150 ohm, 1/16W
RR17	24872151	Chip, 150 ohm, 1/16W
RR18	24872102	Chip, 1k ohm, 1/16W
RR31	24872101	Chip, 100 ohm, 1/16W
RR52	24872102	Chip, 1k ohm, 1/16W
RR53	24872471	Chip, 470 ohm, 1/16W
RR54	24872102	Chip, 1k ohm, 1/16W
RR55	24872471	Chip, 470 ohm, 1/16W
RR56	24872102	Chip, 1k ohm, 1/16W
RR57	24872471	Chip, 470 ohm, 1/16W
RR61	24872222	Chip, 2200 ohm, 1/16W
RR62	24872222	Chip, 2200 ohm, 1/16W
RR63	24872222	Chip, 2200 ohm, 1/16W
RS02	24366472	CF, 4700 ohm
RS04	24366102	CF, 1k ohm
RS06	24366102	CF, 1k ohm
RS07	24366103	CF, 10k ohm
RS08	24366103	CF, 10k ohm
RS09	24366102	CF, 1k ohm
RS10	24366102	CF, 1k ohm
RS12	24366103	CF, 10k ohm
RS21	24366104	CF, 100k ohm
RS22	24366104	CF, 100k ohm
RS25	24366223	CF, 22k ohm
RS26	24366223	CF, 22k ohm
RS27	24366471	CF, 470 ohm
RS28	24366471	CF, 470 ohm
RS29	24366104	CF, 100k ohm
RS30	24366104	CF, 100k ohm
RS31	24366103	CF, 10k ohm
RS32	24366104	CF, 100k ohm
RS33	24366222	CF, 2200 ohm
RS34	24366222	CF, 2200 ohm
RS35	24366103	CF, 10k ohm
RS36	24366103	CF, 10k ohm
RS37	24366101	CF, 100 ohm
RS40	24366101	CF, 100 ohm
RS42	24366101	CF, 100 ohm
RS48	24366101	CF, 100 ohm
RS49	24366103	CF, 10k ohm
RS51	24366103	CF, 10k ohm
RS52	24366103	CF, 10k ohm
RS53	24366103	CF, 10k ohm
RS54	24366103	CF, 10k ohm
RV01	24366472	CF, 4700 ohm
RV03	24366101	CF, 100 ohm
RV04	24366101	CF, 100 ohm
RV11	24366100	CF, 10 ohm
RV12	24366100	CF, 10 ohm
RV13	24366100	CF, 10 ohm
RV15	24366222	CF, 2200 ohm
RV20	24366750	CF, 75 ohm (40H80)
RV21	24366750	CF, 75 ohm (40H80)
RV22	24366750	CF, 75 ohm (40H80)
RV23	24366332	CF, 3300 ohm (40H80)
RV24	24366750	CF, 75 ohm
RV25	24366750	CF, 75 ohm
RV26	24366750	CF, 75 ohm
RV28	24366472	CF, 4700 ohm
RV29	24366472	CF, 4700 ohm
RV31	24366332	CF, 3300 ohm
RV31	24872101	Chip, 100 ohm, 1/16W

Location No.	Part No.	Description
RV32	24366750	CF, 75 ohm
RV32	24872101	Chip, 100 ohm, 1/16W
RV63	24366102	CF, 1k ohm
RV64	24366750	CF, 75 ohm
RV65	24366750	CF, 75 ohm
RV67	24366750	CF, 75 ohm
RV74	24366750	CF, 75 ohm
RV81	24366472	CF, 4700 ohm
RV83	24366332	CF, 3300 ohm
RV84	24366750	CF, 75 ohm
RV85	24552181	OMF, 180 ohm, 1/2W
RV89	24366680	CF, 68 ohm
RV93	24366101	CF, 100 ohm
RV97	24366221	CF, 220 ohm
RV117	24366750	CF, 75 ohm
RV118	24366750	CF, 75 ohm
RV119	24366750	CF, 75 ohm
RV120	24366750	CF, 75 ohm (56H80)
RV121	24366750	CF, 75 ohm (56H80)
RV122	24366750	CF, 75 ohm (56H80)
RV123	24366332	CF, 3300 ohm (56H80)
RV124	24366392	CF, 3900 ohm
RV125	24366123	CF, 12k ohm
RV126	24366274	CF, 270k ohm
RV127	24366331	CF, 330 ohm
RV128	24366472	CF, 4700 ohm
RV140	24366103	CF, 10k ohm
RV141	24366302	CF, 3k ohm
RV142	24366103	CF, 10k ohm
RV143	24366103	CF, 10k ohm
RV169	24872102	Chip, 1k ohm, 1/16W
RV178	24872152	Chip, 1500 ohm, 1/16W
RV179	24872472	Chip, 4700 ohm, 1/16W
RV180	24872472	Chip, 4700 ohm, 1/16W
RV181	24872101	Chip, 100 ohm, 1/16W
RV182	24872101	Chip, 100 ohm, 1/16W
RV183	24872101	Chip, 100 ohm, 1/16W
RV184	24872182	Chip, 1800 ohm, 1/16W
RV185	24872182	Chip, 1800 ohm, 1/16W
RV186	24872182	Chip, 1800 ohm, 1/16W
RV510	24011102	Chip, 1k ohm, 1/20W
RV511	24011472	Chip, 4700 ohm, 1/20W
RV520	24011472	Chip, 4700 ohm, 1/20W
RV521	24011472	Chip, 4700 ohm, 1/20W
RV522	24011472	Chip, 4700 ohm, 1/20W
RV523	24011101	Chip, 100 ohm, 1/20W
RV525	24011101	Chip, 100 ohm, 1/20W
RV527	24011101	Chip, 100 ohm, 1/20W
RV529	24011472	Chip, 4700 ohm, 1/20W
RV530	24011472	Chip, 4700 ohm, 1/20W
RV531	24011472	Chip, 4700 ohm, 1/20W
RV532	24011101	Chip, 100 ohm, 1/20W
RV533	24011101	Chip, 100 ohm, 1/20W
RV534	24011101	Chip, 100 ohm, 1/20W
RV544	24011103	Chip, 10k ohm, 1/20W
RV545	24011103	Chip, 10k ohm, 1/20W
RV546	24011103	Chip, 10k ohm, 1/20W
RW10	24872102	Chip, 1k ohm, 1/16W
RW30	24872102	Chip, 1k ohm, 1/16W
RW40	24366182	CF, 1800 ohm
RW45	24366103	CF, 10k ohm
RX11	24872221	Chip, 220 ohm, 1/16W
RX12	24872221	Chip, 220 ohm, 1/16W
RX101	24011101	Chip, 100 ohm, 1/20W

Location No.	Part No.	Description
RX102	24011222	Chip, 2200 ohm, 1/20W
RX103	24011123	Chip, 12k ohm, 1/20W
RX104	24011562	Chip, 5600 ohm, 1/20W
RX105	24872331	Chip, 330 ohm, 1/16W
RX106	24011151	Chip, 150 ohm, 1/20W
RX107	24011331	Chip, 330 ohm, 1/20W
RX108	24011123	Chip, 12k ohm, 1/20W
RX109	24011562	Chip, 5600 ohm, 1/20W
RX110	24872431	Chip, 430 ohm, 1/16W
RX111	24011470	Chip, 47 ohm, 1/20W
RX112	24871681	Chip, 680 ohm, 1/8W
RX113	24011121	Chip, 120 ohm, 1/20W
RX114	24011471	Chip, 470 ohm, 1/20W
RX115	24011272	Chip, 2700 ohm, 1/20W
RX116	24872102	Chip, 1k ohm, 1/16W
RX119	24011102	Chip, 1k ohm, 1/20W
RX121	24871471	Chip, 470 ohm, 1/8W
RX122	24011471	Chip, 470 ohm, 1/20W
RX123	24872471	Chip, 470 ohm, 1/16W
RX124	24011100	Chip, 10 ohm, 1/20W
RX131	24011101	Chip, 100 ohm, 1/20W
RX132	24011222	Chip, 2200 ohm, 1/20W
RX133	24011123	Chip, 12k ohm, 1/20W
RX134	24011562	Chip, 5600 ohm, 1/20W
RX135	24872331	Chip, 330 ohm, 1/16W
RX136	24011151	Chip, 150 ohm, 1/20W
RX137	24011331	Chip, 330 ohm, 1/20W
RX138	24011123	Chip, 12k ohm, 1/20W
RX139	24011562	Chip, 5600 ohm, 1/20W
RX140	24872431	Chip, 430 ohm, 1/16W
RX141	24011470	Chip, 47 ohm, 1/20W
RX142	24871681	Chip, 680 ohm, 1/8W
RX143	24011121	Chip, 120 ohm, 1/20W
RX144	24011471	Chip, 470 ohm, 1/20W
RX146	24872102	Chip, 1k ohm, 1/16W
RX149	24011102	Chip, 1k ohm, 1/20W
RX151	24011102	Chip, 1k ohm, 1/20W
RX152	24011471	Chip, 470 ohm, 1/20W
RX153	24872331	Chip, 330 ohm, 1/16W
RX154	24011100	Chip, 10 ohm, 1/20W
RX161	24011101	Chip, 100 ohm, 1/20W
RX162	24011222	Chip, 2200 ohm, 1/20W
RX163	24011123	Chip, 12k ohm, 1/20W
RX164	24011562	Chip, 5600 ohm, 1/20W
RX165	24872331	Chip, 330 ohm, 1/16W
RX166	24011151	Chip, 150 ohm, 1/20W
RX167	24011331	Chip, 330 ohm, 1/20W
RX168	24011123	Chip, 12k ohm, 1/20W
RX169	24011562	Chip, 5600 ohm, 1/20W
RX170	24872431	Chip, 430 ohm, 1/16W
RX171	24011470	Chip, 47 ohm, 1/20W
RX172	24871681	Chip, 680 ohm, 1/8W
RX173	24011121	Chip, 120 ohm, 1/20W
RX174	24011471	Chip, 470 ohm, 1/20W
RX176	24872102	Chip, 1k ohm, 1/16W
RX179	24011102	Chip, 1k ohm, 1/20W
RX181	24011102	Chip, 1k ohm, 1/20W
RX182	24011471	Chip, 470 ohm, 1/20W
RX183	24872331	Chip, 330 ohm, 1/16W
RX184	24011100	Chip, 10 ohm, 1/20W
RX191	24011102	Chip, 1k ohm, 1/20W
RX192	24011100	Chip, 10 ohm, 1/20W
RX193	24871331	Chip, 330 ohm, 1/8W
RX195	24011100	Chip, 10 ohm, 1/20W

Location No.	Part No.	Description
RX196	24011100	Chip, 10 ohm, 1/20W
RX199	24011101	Chip, 100 ohm, 1/20W
RX201	24011101	Chip, 100 ohm, 1/20W
RX202	24011221	Chip, 220 ohm, 1/20W
RX203	24011102	Chip, 1k ohm, 1/20W
RX204	24011101	Chip, 100 ohm, 1/20W
RX205	24011102	Chip, 1k ohm, 1/20W
RX211	24871100	Chip, 10 ohm, 1/8W
RX219	24011100	Chip, 10 ohm, 1/20W
RX220	24011562	Chip, 5600 ohm, 1/20W
RX221	24011272	Chip, 2700 ohm, 1/20W
RX224	24011151	Chip, 150 ohm, 1/20W
RX225	24011121	Chip, 120 ohm, 1/20W
RX227	24011100	Chip, 10 ohm, 1/20W
RX228	24011100	Chip, 10 ohm, 1/20W
RX229	24011100	Chip, 10 ohm, 1/20W
RX241	24011152	Chip, 1500 ohm, 1/20W
RX244	24011471	Chip, 470 ohm, 1/20W
RX245	24011681	Chip, 680 ohm, 1/20W
RX246	24011152	Chip, 1500 ohm, 1/20W
RX247	24011100	Chip, 10 ohm, 1/20W
RX248	24011100	Chip, 10 ohm, 1/20W
RX249	24011100	Chip, 10 ohm, 1/20W
RX301	24011103	Chip, 10k ohm, 1/20W
RX302	24011103	Chip, 10k ohm, 1/20W
RX303	24011103	Chip, 10k ohm, 1/20W
RX304	24011103	Chip, 10k ohm, 1/20W
RX306	24011100	Chip, 10 ohm, 1/20W
RX307	24011101	Chip, 100 ohm, 1/20W
RX308	24011100	Chip, 10 ohm, 1/20W
RX309	24011103	Chip, 10k ohm, 1/20W
RX310	24011100	Chip, 10 ohm, 1/20W
RX311	24011100	Chip, 10 ohm, 1/20W
RX313	24011100	Chip, 10 ohm, 1/20W
RX317	24011100	Chip, 10 ohm, 1/20W
RX319	24011100	Chip, 10 ohm, 1/20W
RX320	24011103	Chip, 10k ohm, 1/20W
RX321	24011103	Chip, 10k ohm, 1/20W
RX322	24011103	Chip, 10k ohm, 1/20W
RX323	24011103	Chip, 10k ohm, 1/20W
RX326	24011100	Chip, 10 ohm, 1/20W
RX328	24011103	Chip, 10k ohm, 1/20W
RX330	24011100	Chip, 10 ohm, 1/20W
RX331	24011100	Chip, 10 ohm, 1/20W
RX332	24011100	Chip, 10 ohm, 1/20W
RX333	24011100	Chip, 10 ohm, 1/20W
RX334	24011100	Chip, 10 ohm, 1/20W
RX335	24011100	Chip, 10 ohm, 1/20W
RX336	24011103	Chip, 10k ohm, 1/20W
RX337	24011100	Chip, 10 ohm, 1/20W
RX338	24011100	Chip, 10 ohm, 1/20W
RX339	24011100	Chip, 10 ohm, 1/20W
RX340	24019439	Chip, 47 ohm, 1/16W
RX341	24019439	Chip, 47 ohm, 1/16W
RX342	24019439	Chip, 47 ohm, 1/16W
RX343	24019439	Chip, 47 ohm, 1/16W
RX344	24011470	Chip, 47 ohm, 1/20W
RX345	24019439	Chip, 47 ohm, 1/16W
RX346	24019439	Chip, 47 ohm, 1/16W
RX347	24019439	Chip, 47 ohm, 1/16W
RX348	24019439	Chip, 47 ohm, 1/16W
RX349	24019439	Chip, 47 ohm, 1/16W
RX350	24019439	Chip, 47 ohm, 1/16W
RX351	24019439	Chip, 47 ohm, 1/16W

Location No.	Part No.	Description
RX352	24019439	Chip, 47 ohm, 1/16W
RX357	24011511	Chip, 510 ohm, 1/20W
RX358	24011470	Chip, 47 ohm, 1/20W
RX360	24011101	Chip, 100 ohm, 1/20W
RX363	24011511	Chip, 510 ohm, 1/20W
RX364	24011470	Chip, 47 ohm, 1/20W
RX366	24011101	Chip, 100 ohm, 1/20W
RX370	24011181	Chip, 180 ohm, 1/20W
RX371	24011220	Chip, 22 ohm, 1/20W
RX372	24011272	Chip, 2700 ohm, 1/20W
RX373	24011272	Chip, 2700 ohm, 1/20W
RX374	24011122	Chip, 1200 ohm, 1/20W
RX375	24011181	Chip, 180 ohm, 1/20W
RX376	24011220	Chip, 22 ohm, 1/20W
RX377	24011272	Chip, 2700 ohm, 1/20W
RX378	24011272	Chip, 2700 ohm, 1/20W
RX379	24011122	Chip, 1200 ohm, 1/20W
RX380	24011181	Chip, 180 ohm, 1/20W
RX381	24011220	Chip, 22 ohm, 1/20W
RX382	24011272	Chip, 2700 ohm, 1/20W
RX383	24011272	Chip, 2700 ohm, 1/20W
RX384	24011122	Chip, 1200 ohm, 1/20W
RX399	24011100	Chip, 10 ohm, 1/20W
RX403	24011101	Chip, 100 ohm, 1/20W
RX404	24871101	Chip, 100 ohm, 1/8W
RX405	24011101	Chip, 100 ohm, 1/20W
RX406	24871471	Chip, 470 ohm, 1/8W
RX520	24011100	Chip, 10 ohm, 1/20W
RX521	24011222	Chip, 2200 ohm, 1/20W
RX522	24011121	Chip, 120 ohm, 1/20W
RX523	24011681	Chip, 680 ohm, 1/20W
RX524	24871681	Chip, 680 ohm, 1/8W
RX525	24000445	Chip Jumper, 1680 Type
RX530	24011100	Chip, 10 ohm, 1/20W
RX531	24011222	Chip, 2200 ohm, 1/20W
RX532	24011121	Chip, 120 ohm, 1/20W
RX533	24011471	Chip, 470 ohm, 1/20W
RX534	24871681	Chip, 680 ohm, 1/8W
RX535	24000445	Chip Jumper, 1680 Type
RX540	24011100	Chip, 10 ohm, 1/20W
RX541	24011222	Chip, 2200 ohm, 1/20W
RX542	24011121	Chip, 120 ohm, 1/20W
RX543	24011471	Chip, 470 ohm, 1/20W
RX544	24871681	Chip, 680 ohm, 1/8W
RX545	24000445	Chip Jumper, 1680 Type
RX601	24011100	Chip, 10 ohm, 1/20W
RX811	24011471	Chip, 470 ohm, 1/20W
RX812	24011471	Chip, 470 ohm, 1/20W
RX821	24011151	Chip, 150 ohm, 1/20W
RX822	24011151	Chip, 150 ohm, 1/20W
RX823	24011151	Chip, 150 ohm, 1/20W
RX824	24011101	Chip, 100 ohm, 1/20W
RX825	24011101	Chip, 100 ohm, 1/20W
RX826	24011681	Chip, 680 ohm, 1/20W
RX827	24011101	Chip, 100 ohm, 1/20W
RX829	24011102	Chip, 1k ohm, 1/20W
RX831	24000445	Chip Jumper, 1680 Type
RX832	24011100	Chip, 10 ohm, 1/20W
RX833	24011100	Chip, 10 ohm, 1/20W
RX844	24011101	Chip, 100 ohm, 1/20W
RX845	24011101	Chip, 100 ohm, 1/20W
RX890	24011682	Chip, 6800 ohm, 1/20W
RX891	24011103	Chip, 10k ohm, 1/20W
RX892	24011472	Chip, 4700 ohm, 1/20W

Location No.	Part No.	Description
RX893	24011682	Chip, 6800 ohm, 1/20W
RX894	24011103	Chip, 10k ohm, 1/20W
RX895	24011472	Chip, 4700 ohm, 1/20W
RX896	24011101	Chip, 100 ohm, 1/20W
RX897	24000445	Chip Jumper, 1680 Type
RX899	24011101	Chip, 100 ohm, 1/20W
RX924	24011223	Chip, 22k ohm, 1/20W
RX934	24011223	Chip, 22k ohm, 1/20W
RX942	24011103	Chip, 10k ohm, 1/20W
RX944	24011223	Chip, 22k ohm, 1/20W
RY01	24011102	Chip, 1k ohm, 1/20W
RY02	24011471	Chip, 470 ohm, 1/20W
RY09	24011102	Chip, 1k ohm, 1/20W
RY10	24011102	Chip, 1k ohm, 1/20W
RY20	24011101	Chip, 100 ohm, 1/20W
RY21	24011101	Chip, 100 ohm, 1/20W
RY22	24011153	Chip, 15k ohm, 1/20W
RY23	24011332	Chip, 3300 ohm, 1/20W
RY24	24011102	Chip, 1k ohm, 1/20W
RY25	24011102	Chip, 1k ohm, 1/20W
RY26	24011331	Chip, 330 ohm, 1/20W
RY27	24011330	Chip, 33 ohm, 1/20W
RY28	24011153	Chip, 15k ohm, 1/20W
RY31	24011101	Chip, 100 ohm, 1/20W
RY32	24011330	Chip, 33 ohm, 1/20W
RY33	24011330	Chip, 33 ohm, 1/20W
RY68	24011152	Chip, 1500 ohm, 1/20W
RY69	24011682	Chip, 6800 ohm, 1/20W
RY79	24011103	Chip, 10k ohm, 1/20W
RY80	24366331	CF, 330 ohm
RY81	24366101	CF, 100 ohm
RY82	24366102	CF, 1k ohm
RY87	24366100	CF, 10 ohm
RY105	24011331	Chip, 330 ohm, 1/20W
RY106	24011101	Chip, 100 ohm, 1/20W
RY109	24011331	Chip, 330 ohm, 1/20W
RY110	24011102	Chip, 1k ohm, 1/20W
RY113	24011331	Chip, 330 ohm, 1/20W
RY114	24011102	Chip, 1k ohm, 1/20W
RY120	24011821	Chip, 820 ohm, 1/20W
RY121	24011681	Chip, 680 ohm, 1/20W
RY122	24871471	Chip, 470 ohm, 1/8W
RY123	24011561	Chip, 560 ohm, 1/20W
RY124	24011272	Chip, 2700 ohm, 1/20W
RY125	24011152	Chip, 1500 ohm, 1/20W
RY126	24011561	Chip, 560 ohm, 1/20W
RY127	24011272	Chip, 2700 ohm, 1/20W
RY128	24011152	Chip, 1500 ohm, 1/20W
RY129	24011222	Chip, 2200 ohm, 1/20W
RY131	24011101	Chip, 100 ohm, 1/20W
RY132	24011101	Chip, 100 ohm, 1/20W
RY133	24011101	Chip, 100 ohm, 1/20W
RY134	24011101	Chip, 100 ohm, 1/20W
RY135	24011101	Chip, 100 ohm, 1/20W
RY136	24011101	Chip, 100 ohm, 1/20W
RY138	24011331	Chip, 330 ohm, 1/20W
RY139	24011222	Chip, 2200 ohm, 1/20W
RY140	24011392	Chip, 3900 ohm, 1/20W
RY150	24011102	Chip, 1k ohm, 1/20W
RY151	24011471	Chip, 470 ohm, 1/20W
RY152	24011102	Chip, 1k ohm, 1/20W
RY154	24011473	Chip, 47k ohm, 1/20W
RY155	24011102	Chip, 1k ohm, 1/20W
RY156	24011182	Chip, 1800 ohm, 1/20W

Location No.	Part No.	Description
RY157	24011102	Chip, 1k ohm, 1/20W
RY190	24011103	Chip, 10k ohm, 1/20W
RY220	24011821	Chip, 820 ohm, 1/20W
RY221	24011681	Chip, 680 ohm, 1/20W
RY222	24871471	Chip, 470 ohm, 1/8W
RY223	24011561	Chip, 560 ohm, 1/20W
RY224	24011272	Chip, 2700 ohm, 1/20W
RY225	24011102	Chip, 1k ohm, 1/20W
RY226	24011561	Chip, 560 ohm, 1/20W
RY227	24011272	Chip, 2700 ohm, 1/20W
RY228	24011102	Chip, 1k ohm, 1/20W
RY230	24011101	Chip, 100 ohm, 1/20W
RY231	24011101	Chip, 100 ohm, 1/20W
RY232	24011101	Chip, 100 ohm, 1/20W
RY233	24011101	Chip, 100 ohm, 1/20W
RY256	24011101	Chip, 100 ohm, 1/20W
RY257	24011101	Chip, 100 ohm, 1/20W
RY300	24011152	Chip, 1500 ohm, 1/20W
RY301	24011221	Chip, 220 ohm, 1/20W
RY302	24011102	Chip, 1k ohm, 1/20W
RY303	24011273	Chip, 27k ohm, 1/20W
RY304	24011102	Chip, 1k ohm, 1/20W
RY305	24011331	Chip, 330 ohm, 1/20W
RY306	24011152	Chip, 1500 ohm, 1/20W
RY307	24011102	Chip, 1k ohm, 1/20W
RY308	24011181	Chip, 180 ohm, 1/20W
RY310	24011103	Chip, 10k ohm, 1/20W
RY311	24011103	Chip, 10k ohm, 1/20W
RY312	24011103	Chip, 10k ohm, 1/20W
RY313	24011103	Chip, 10k ohm, 1/20W
RY330	24011182	Chip, 1800 ohm, 1/20W
RY331	24011221	Chip, 220 ohm, 1/20W
RY332	24000445	Chip Jumper, 1680 Type
RY333	24011273	Chip, 27k ohm, 1/20W
RY334	24011331	Chip, 330 ohm, 1/20W
RY335	24011331	Chip, 330 ohm, 1/20W
RY336	24011122	Chip, 1200 ohm, 1/20W
RY337	24011102	Chip, 1k ohm, 1/20W
RY338	24011181	Chip, 180 ohm, 1/20W
RY339	24011155	Chip, 1.5M ohm, 1/20W
RY340	24011152	Chip, 1500 ohm, 1/20W
RY341	24011221	Chip, 220 ohm, 1/20W
RY342	24011102	Chip, 1k ohm, 1/20W
RY343	24011273	Chip, 27k ohm, 1/20W
RY344	24011102	Chip, 1k ohm, 1/20W
RY345	24011331	Chip, 330 ohm, 1/20W
RY346	24011152	Chip, 1500 ohm, 1/20W
RY347	24011102	Chip, 1k ohm, 1/20W
RY348	24011181	Chip, 180 ohm, 1/20W
RY349	24011155	Chip, 1.5M ohm, 1/20W
RY385	24011103	Chip, 10k ohm, 1/20W
RY386	24011152	Chip, 1500 ohm, 1/20W
RY388	24011622	Chip, 6200 ohm, 1/20W
RY400	24011103	Chip, 10k ohm, 1/20W
RY401	24011103	Chip, 10k ohm, 1/20W
RY426	24011103	Chip, 10k ohm, 1/20W
RY440	24011103	Chip, 10k ohm, 1/20W
RY510	24011102	Chip, 1k ohm, 1/20W
RY511	24011472	Chip, 4700 ohm, 1/20W
RY520	24011472	Chip, 4700 ohm, 1/20W
RY521	24011472	Chip, 4700 ohm, 1/20W
RY522	24011472	Chip, 4700 ohm, 1/20W
RY523	24011101	Chip, 100 ohm, 1/20W
RY525	24011101	Chip, 100 ohm, 1/20W

Location No.	Part No.	Description
RY527	24011101	Chip, 100 ohm, 1/20W
RY529	24011472	Chip, 4700 ohm, 1/20W
RY530	24011472	Chip, 4700 ohm, 1/20W
RY531	24011472	Chip, 4700 ohm, 1/20W
RY532	24011101	Chip, 100 ohm, 1/20W
RY533	24011101	Chip, 100 ohm, 1/20W
RY534	24011101	Chip, 100 ohm, 1/20W
RY544	24011103	Chip, 10k ohm, 1/20W
RY545	24011103	Chip, 10k ohm, 1/20W
RY546	24011103	Chip, 10k ohm, 1/20W
RY550	24011100	Chip, 10 ohm, 1/20W
RY551	24011100	Chip, 10 ohm, 1/20W
RY671	24011103	Chip, 10k ohm, 1/20W
RY673	24011103	Chip, 10k ohm, 1/20W
RY674	24011103	Chip, 10k ohm, 1/20W
RY675	24011103	Chip, 10k ohm, 1/20W
RY676	24011103	Chip, 10k ohm, 1/20W
RY677	24011103	Chip, 10k ohm, 1/20W
RY703	24011103	Chip, 10k ohm, 1/20W
RY721	24011152	Chip, 1500 ohm, 1/20W
RY722	24011152	Chip, 1500 ohm, 1/20W
RY723	24011152	Chip, 1500 ohm, 1/20W
RY741	24011101	Chip, 100 ohm, 1/20W
RY742	24011101	Chip, 100 ohm, 1/20W
RY743	24011101	Chip, 100 ohm, 1/20W
RY747	24011102	Chip, 1k ohm, 1/20W
RY751	24011222	Chip, 2200 ohm, 1/20W
RY752	24011222	Chip, 2200 ohm, 1/20W
RY753	24011222	Chip, 2200 ohm, 1/20W
RY760	24011152	Chip, 1500 ohm, 1/20W
RY761	24011682	Chip, 6800 ohm, 1/20W
RY762	24011103	Chip, 10k ohm, 1/20W
RY764	24011102	Chip, 1k ohm, 1/20W
RY767	24011101	Chip, 100 ohm, 1/20W
RY771	24011101	Chip, 100 ohm, 1/20W
RY773	24011101	Chip, 100 ohm, 1/20W
RY775	24011101	Chip, 100 ohm, 1/20W
RY804	24011333	Chip, 33k ohm, 1/20W
RY805	24011153	Chip, 15k ohm, 1/20W
RY806	24011101	Chip, 100 ohm, 1/20W
RY808	24011100	Chip, 10 ohm, 1/20W
RY810	24011101	Chip, 100 ohm, 1/20W
RY909	24011103	Chip, 10k ohm, 1/20W
RZ01	24011330	Chip, 33 ohm, 1/20W
RZ02	24011152	Chip, 1500 ohm, 1/20W
RZ03	24011682	Chip, 6800 ohm, 1/20W
RZ04	24011392	Chip, 3900 ohm, 1/20W
RZ05	24011122	Chip, 1200 ohm, 1/20W
RZ06	24011431	Chip, 430 ohm, 1/20W
RZ07	24871331	Chip, 330 ohm, 1/8W
RZ08	24011151	Chip, 150 ohm, 1/20W
RZ09	24011330	Chip, 33 ohm, 1/20W
RZ10	24011102	Chip, 1k ohm, 1/20W
RZ11	24011561	Chip, 560 ohm, 1/20W
RZ12	24011182	Chip, 1800 ohm, 1/20W
RZ13	24011392	Chip, 3900 ohm, 1/20W
RZ14	24011123	Chip, 12k ohm, 1/20W
RZ15	24011151	Chip, 150 ohm, 1/20W
RZ16	24011102	Chip, 1k ohm, 1/20W
RZ17	24871181	Chip, 180 ohm, 1/8W
RZ18	24011121	Chip, 120 ohm, 1/20W
RZ21	24011271	Chip, 270 ohm, 1/20W
RZ26	24011102	Chip, 1k ohm, 1/20W
RZ28	24011102	Chip, 1k ohm, 1/20W

Location No.	Part No.	Description
RZ30	24000445	Chip Jumper, 1680 Type
RZ31	24011104	Chip, 100k ohm, 1/20W
RZ32	24000445	Chip Jumper, 1680 Type
RZ33	24011101	Chip, 100 ohm, 1/20W
RZ34	24011101	Chip, 100 ohm, 1/20W
RZ49	24011102	Chip, 1k ohm, 1/20W
RZ60	24011102	Chip, 1k ohm, 1/20W
RZ64	24011221	Chip, 220 ohm, 1/20W
RZ65	24011224	Chip, 220k ohm, 1/20W
RZ66	24011223	Chip, 22k ohm, 1/20W
RZ67	24011102	Chip, 1k ohm, 1/20W
RZ68	24011222	Chip, 2200 ohm, 1/20W
RZ69	24011153	Chip, 15k ohm, 1/20W
RZ70	24011472	Chip, 4700 ohm, 1/20W
RZ71	24011101	Chip, 100 ohm, 1/20W
RZ72	24011103	Chip, 10k ohm, 1/20W
RZ73	24011103	Chip, 10k ohm, 1/20W
RZ74	24872229	Chip, 2.2 ohm, 1/16W
RZ101	24011101	Chip, 100 ohm, 1/20W
RZ102	24011221	Chip, 220 ohm, 1/20W
RZ103	24011102	Chip, 1k ohm, 1/20W
RZ104	24011102	Chip, 1k ohm, 1/20W
RZ105	24011821	Chip, 820 ohm, 1/20W
RZ106	24000445	Chip Jumper, 1680 Type
RZ107	24011751	Chip, 750 ohm, 1/20W
RZ109	24011102	Chip, 1k ohm, 1/20W
RZ110	24011152	Chip, 1500 ohm, 1/20W
RZ243	24011220	Chip, 22 ohm, 1/20W
RZ244	24011152	Chip, 1500 ohm, 1/20W
RZ245	24011220	Chip, 22 ohm, 1/20W
RZ246	24011152	Chip, 1500 ohm, 1/20W
RZ265	24011472	Chip, 4700 ohm, 1/20W
RZ266	24011103	Chip, 10k ohm, 1/20W
RZ800	24871330	Chip, 33 ohm, 1/8W
RZ802	24871330	Chip, 33 ohm, 1/8W
RZ804	24011330	Chip, 33 ohm, 1/20W

COILS & TRANSFORMERS

L101	23289680	Coil, Peaking, TRF4680AF
L103	23289470	Coil, Peaking, TRF4470AF
L111	23289680	Coil, Peaking, TRF4680AF
L113	23289220	Coil, Peaking, TRF4220AF
L115	23103852	Coil, Filter, TEM2028AH
L121	23238562	Coil, Peaking, TRF4109AJ
L122	23238562	Coil, Peaking, TRF4109AJ
L301	23237975	Coil, Peaking, TRF4101AC
L302	23248073	Coil, Choke, TLN3299D
L303	23248073	Coil, Choke, TLN3299D
L304	23103859	Coil (Ferrite Bead), TEM2011
L305	23103775	Coil (Ferrite Bead), TEM2014
L402	23248191	Coil, Choke, TLN3351AD
⚠L403	23233995	Coil, Linearity, TLN2215AG
L406	23289560	Coil, Peaking, TRF4560AF
⚠L407	23248259	Coil, Choke, TLN3505AF (40H80)
⚠L408	23248248	Coil, Choke, TLN3500AH
L409	23103775	Coil (Ferrite Bead), TEM2014
L410	23289120	Coil, Peaking, TRF4120AF
L411	23103775	Coil (Ferrite Bead), TEM2014
L413	23103880	Coil (Ferrite Bead), TEM2011Y
⚠L452	23248223	Coil, Choke, TLN3451AH
⚠L462	23231300	Deflection Yoke, TDY707MS
⚠L463	23231300	Deflection Yoke, TDY707MS
⚠L464	23231300	Deflection Yoke, TDY707MS

Location No.	Part No.	Description
L472	23102457	Magnet, MAG-1102 (40H80)
L472	23102499	Magnet, MAG-1119
L473	23102457	Magnet, MAG-1102 (40H80)
L473	23102499	Magnet, MAG-1119
L474	23102457	Magnet, MAG-1102 (40H80)
L474	23102499	Magnet, MAG-1119
L502	23289120	Coil, Peaking, TRF4120AF
L503	23289120	Coil, Peaking, TRF4120AF
L504	23103827	Chip (Ferrite Bead), TEM2120M
L506	23103827	Chip (Ferrite Bead), TEM2120M
L518	23245834	Chip, Inductor, TRF4220CB
L701	23237987	Coil, Peaking, TRF4100AC
L702	23261974	Coil, Choke, HC5-035
L704	23103859	Coil (Ferrite Bead), TEM2011
L705	23103859	Coil (Ferrite Bead), TEM2011
L764	23103859	Coil (Ferrite Bead), TEM2011
L765	23103859	Coil (Ferrite Bead), TEM2011
L766	23261974	Coil, Choke, HC5-035
L769	23237987	Coil, Peaking, TRF4100AC
L780	23237987	Coil, Peaking, TRF4100AC
L781	23103859	Coil (Ferrite Bead), TEM2011
L782	23103859	Coil (Ferrite Bead), TEM2011
L783	23261974	Coil, Choke, HC5-035
L851	23103880	Coil (Ferrite Bead), TEM2011Y
L852	23103880	Coil (Ferrite Bead), TEM2011Y
L853	23289842	Coil, Peaking, TRF4220AT
L861	23103880	Coil (Ferrite Bead), TEM2011Y
L862	23103859	Coil (Ferrite Bead), TEM2011
L881	23103880	Coil (Ferrite Bead), TEM2011Y
L882	23103880	Coil (Ferrite Bead), TEM2011Y
L885	23248073	Coil, Choke, TLN3299D
L888	23103880	Coil (Ferrite Bead), TEM2011Y
L889	23103880	Coil (Ferrite Bead), TEM2011Y
L891	23103880	Coil (Ferrite Bead), TEM2011Y
L892	23103880	Coil (Ferrite Bead), TEM2011Y
L893	23103880	Coil (Ferrite Bead), TEM2011Y
L894	23103880	Coil (Ferrite Bead), TEM2011Y
L895	70211045	Coil, Choke, 0.02mH
L896	70211045	Coil, Choke, 0.02mH
L897	23248073	Coil, Choke, TLN3299D
L898	23248073	Coil, Choke, TLN3299D
L902	23289479	Coil, Peaking, TRF44R7AF
L903	23289680	Coil, Peaking, TRF4680AF
L911	23237987	Coil, Peaking, TRF4100AC
L912	23289680	Coil, Peaking, TRF4680AF
L913	23289479	Coil, Peaking, TRF44R7AF
L915	23289100	Coil, Peaking, TRF4100AF
L922	23289680	Coil, Peaking, TRF4680AF
L923	23289479	Coil, Peaking, TRF44R7AF
L925	23289100	Coil, Peaking, TRF4100AF
L961	23238714	Coil, Peaking, TRF4100AJ
L962	23289100	Coil, Peaking, TRF4100AF
L7701	23103859	Coil (Ferrite Bead), TEM2011
L7702	23103859	Coil (Ferrite Bead), TEM2011
L7703	23103859	Coil (Ferrite Bead), TEM2011
L7704	23103859	Coil (Ferrite Bead), TEM2011
L7705	23103859	Coil (Ferrite Bead), TEM2011
L7706	23103859	Coil (Ferrite Bead), TEM2011
L7710	23248195	Coil, Choke, TLN3441AT
L7711	23248195	Coil, Choke, TLN3441AT
LA22	23245830	Chip, Inductor, TRF4100CB
LA49	23245830	Chip, Inductor, TRF4100CB

Location No.	Part No.	Description
LB42	23245830	Chip, Inductor, TRF4100CB
LH001	23103864	Chip (Ferrite Bead), TEM2103T
LH002	23103864	Chip (Ferrite Bead), TEM2103T
LH003	23103859	Coil (Ferrite Bead), TEM2011
LH004	23103859	Coil (Ferrite Bead), TEM2011
LH005	23103859	Coil (Ferrite Bead), TEM2011
LH007	23103795	Chip, Impeder, MMZ2012S301A
LH009	23103795	Chip, Impeder, MMZ2012S301A
LH010	23103795	Chip, Impeder, MMZ2012S301A
LH012	23103859	Coil (Ferrite Bead), TEM2011
LH061	23103864	Chip (Ferrite Bead), TEM2103T
LH062	23103864	Chip (Ferrite Bead), TEM2103T
LH063	23103864	Chip (Ferrite Bead), TEM2103T
LH064	23103864	Chip (Ferrite Bead), TEM2103T
LH065	23103864	Chip (Ferrite Bead), TEM2103T
LH066	23103864	Chip (Ferrite Bead), TEM2103T
LH067	23103864	Chip (Ferrite Bead), TEM2103T
LH120	23103864	Chip (Ferrite Bead), TEM2103T
LH122	23103864	Chip (Ferrite Bead), TEM2103T
LH123	23103864	Chip (Ferrite Bead), TEM2103T
LH124	23103864	Chip (Ferrite Bead), TEM2103T
LH125	23103864	Chip (Ferrite Bead), TEM2103T
LH126	23103864	Chip (Ferrite Bead), TEM2103T
LM09	23103906	Chip (Ferrite Bead), TEM2118AS
LV05	23289560	Coil, Peaking, TRF4560AF
LV06	23289560	Coil, Peaking, TRF4560AF
LV07	23289100	Coil, Peaking, TRF4100AF
LV11	23289100	Coil, Peaking, TRF4100AF
LV13	23289100	Coil, Peaking, TRF4100AF
LV14	23289100	Coil, Peaking, TRF4100AF
LV20	23238705	Coil, Peaking, TRF4560AJ (40H80)
LV120	23238705	Coil, Peaking, TRF4560AJ (56H80)
LV502	23103906	Chip (Ferrite Bead), TEM2118AS
LV503	23103906	Chip (Ferrite Bead), TEM2118AS
LX101	23246199	Chip, Inductor, TRF42R2CG
LX102	23246323	Chip, Inductor, TRF44R7CT
LX111	23103906	Chip (Ferrite Bead), TEM2118AS
LX112	23103906	Chip (Ferrite Bead), TEM2118AS
LX113	23103806	Chip (Ferrite Bead), TEM2114T
LX131	23246199	Chip, Inductor, TRF42R2CG
LX132	23246323	Chip, Inductor, TRF44R7CT
LX161	23246199	Chip, Inductor, TRF42R2CG
LX162	23246323	Chip, Inductor, TRF44R7CT
LX197	24000445	Chip Jumper, 1680 Type
LX198	23103906	Chip (Ferrite Bead), TEM2118AS
LX199	23103906	Chip (Ferrite Bead), TEM2118AS
LX201	23103906	Chip (Ferrite Bead), TEM2118AS
LX206	23103906	Chip (Ferrite Bead), TEM2118AS
LX207	23103906	Chip (Ferrite Bead), TEM2118AS

Location No.	Part No.	Description
LX211	23103906	Chip (Ferrite Bead), TEM2118AS
LX221	23103906	Chip (Ferrite Bead), TEM2118AS
LX222	23103906	Chip (Ferrite Bead), TEM2118AS
LX223	23103906	Chip (Ferrite Bead), TEM2118AS
LX224	23103906	Chip (Ferrite Bead), TEM2118AS
LX225	23103906	Chip (Ferrite Bead), TEM2118AS
LX231	23103906	Chip (Ferrite Bead), TEM2118AS
LX241	23103906	Chip (Ferrite Bead), TEM2118AS
LX242	23103906	Chip (Ferrite Bead), TEM2118AS
LX243	23103906	Chip (Ferrite Bead), TEM2118AS
LX244	23103906	Chip (Ferrite Bead), TEM2118AS
LX245	23103906	Chip (Ferrite Bead), TEM2118AS
LX301	23103886	Chip (Ferrite Bead), TEM2129AM
LX311	23103886	Chip (Ferrite Bead), TEM2129AM
LX321	23103906	Chip (Ferrite Bead), TEM2118AS
LX322	23103906	Chip (Ferrite Bead), TEM2118AS
LX341	23103906	Chip (Ferrite Bead), TEM2118AS
LX342	23103906	Chip (Ferrite Bead), TEM2118AS
LX344	23103806	Chip (Ferrite Bead), TEM2114T
LX362	23103886	Chip (Ferrite Bead), TEM2129AM
LX471	23103906	Chip (Ferrite Bead), TEM2118AS
LX473	23246325	Chip, Inductor, TRF4220CT
LX509	23103906	Chip (Ferrite Bead), TEM2118AS
LX510	23103906	Chip (Ferrite Bead), TEM2118AS
LX521	23246199	Chip, Inductor, TRF42R2CG
LX531	23246323	Chip, Inductor, TRF44R7CT
LX541	23246323	Chip, Inductor, TRF44R7CT
LX824	24000445	Chip Jumper, 1680 Type
LX825	24000445	Chip Jumper, 1680 Type
LX826	24000445	Chip Jumper, 1680 Type
LX827	24000445	Chip Jumper, 1680 Type
LX829	24000445	Chip Jumper, 1680 Type
LX844	24000445	Chip Jumper, 1680 Type
LX845	24000445	Chip Jumper, 1680 Type
LY09	23103827	Chip (Ferrite Bead), TEM2120M
LY22	23103824	Coil, TEM2028K
LY64	23103827	Chip (Ferrite Bead), TEM2120M
LY121	23103827	Chip (Ferrite Bead), TEM2120M

Location No.	Part No.	Description
LY122	23103827	Chip (Ferrite Bead), TEM2120M
LY123	23103827	Chip (Ferrite Bead), TEM2120M
LY124	23103827	Chip (Ferrite Bead), TEM2120M
LY125	23103827	Chip (Ferrite Bead), TEM2120M
LY126	23103827	Chip (Ferrite Bead), TEM2120M
LY127	23103806	Chip (Ferrite Bead), TEM2114T
LY128	23103806	Chip (Ferrite Bead), TEM2114T
LY129	23103827	Chip (Ferrite Bead), TEM2120M
LY130	23103827	Chip (Ferrite Bead), TEM2120M
LY131	23103827	Chip (Ferrite Bead), TEM2120M
LY170	23103806	Chip (Ferrite Bead), TEM2114T
LY227	23103806	Chip (Ferrite Bead), TEM2114T
LY300	24000445	Chip Jumper, 1680 Type
LY301	24000445	Chip Jumper, 1680 Type
LY302	24000445	Chip Jumper, 1680 Type
LY330	23103806	Chip (Ferrite Bead), TEM2114T
LY331	23103806	Chip (Ferrite Bead), TEM2114T
LY340	24000445	Chip Jumper, 1680 Type
LY341	24000445	Chip Jumper, 1680 Type
LY342	24000445	Chip Jumper, 1680 Type
LY502	23103906	Chip (Ferrite Bead), TEM2118AS
LY503	23103906	Chip (Ferrite Bead), TEM2118AS
LY701	24000445	Chip Jumper, 1680 Type
LY800	23103827	Chip (Ferrite Bead), TEM2120M
LY804	23103828	Chip (Ferrite Bead), TEM2121M
LY806	23103828	Chip (Ferrite Bead), TEM2121M
LY807	23103906	Chip (Ferrite Bead), TEM2118AS
LY808	23103827	Chip (Ferrite Bead), TEM2120M
LY809	23103827	Chip (Ferrite Bead), TEM2120M
LZ03	24000445	Chip Jumper, 1680 Type
LZ05	23103906	Chip (Ferrite Bead), TEM2118AS
LZ09	23103906	Chip (Ferrite Bead), TEM2118AS
LZ20	23246316	Chip, Inductor, TRF44R7CR
LZ21	23246317	Chip, Inductor, TRF4100CR
LZ22	23246199	Chip, Inductor, TRF42R2CG
LZ25	23103906	Chip (Ferrite Bead), TEM2118AS
LZ26	23103906	Chip (Ferrite Bead), TEM2118AS
LZ28	23103906	Chip (Ferrite Bead), TEM2118AS
LZ29	23103906	Chip (Ferrite Bead), TEM2118AS
LZ30	24000445	Chip Jumper, 1680 Type
LZ31	23103906	Chip (Ferrite Bead), TEM2118AS

Location No.	Part No.	Description
LZ32	23103906	Chip (Ferrite Bead), TEM2118AS
LZ34	24000445	Chip Jumper, 1680 Type
LZ35	23103906	Chip (Ferrite Bead), TEM2118AS
LZ36	23103906	Chip (Ferrite Bead), TEM2118AS
LZ38	23103906	Chip (Ferrite Bead), TEM2118AS
LZ39	23103906	Chip (Ferrite Bead), TEM2118AS
LZ96	23246206	Chip, Inductor, TRF48R2CG
LZ100	23246223	Chip, Inductor, TRF4330CG
LZ101	23103827	Chip (Ferrite Bead), TEM2120M
LZ102	23103827	Chip (Ferrite Bead), TEM2120M
LZ103	23103906	Chip (Ferrite Bead), TEM2118AS
LZ104	23246219	Chip, Inductor, TRF4150CG
LZ105	23246222	Chip, Inductor, TRF4270CG
LZ106	24000445	Chip Jumper, 1680 Type
T401	23224371	Transformer, Horiz, Drive, TLN1080AH
T403	23224364	Transformer, Focus, TLN2168AH
⚠T461	23236635	Transformer, Flyback, TFB3088AD
T461A	23192940	Anode Cap, TCCP5157
T801	23211698	Line Filter, TRF3218AK
T802	23211712	Line Filter, TRF3209BQ
T840	23217481	Transformer, Power, TPW1562AZ
T862	23217467	Transformer, Converter, TPW3450AS

SEMICONDUCTORS

Location No.	Part No.	Description
Q151	23314962	Transistor, KTA1266 Y
Q152	23314965	Transistor, KTC3198 Y
Q201	A6335470	Transistor, 2SC2712-Y
Q210	A6549570	Transistor, 2SA1586-Y
Q211	23314993	Transistor, 2SC4081T106Q
Q220	A6002040	Transistor, RN1204
Q221	A6002040	Transistor, RN1204
Q301	B0351501	IC, TA75902P(J)
Q302	B0384625	IC, TA8859CP
Q303	23314965	Transistor, KTC3198 Y
Q304	B0351501	IC, TA75902P(J)
Q305	A6541130	Transistor, 2SA1162-Y
Q306	23319787	IC, LA7833S
Q306B	70391355	Screw, BITTB3X8 SZN
Q308	23314965	Transistor, KTC3198 Y
Q309	23314962	Transistor, KTA1266 Y
Q310	23314965	Transistor, KTC3198 Y
Q311	A6002020	Transistor, RN1202
Q350	23904896	IC, JLC1562BFEL
Q403	A6073390	Transistor, 2SK2920
Q404	A6371775	Transistor, 2SC5144
Q404B	72471082	Screw, BRDT2W3X10 SZN
Q404E	A8012650	Spacer, AC263
Q406	23314548	Transistor, 2SC4256
Q407	B0347500	IC, TA75358P
Q410	A6064650	Transistor, 2SK941
Q410	A6549570	Transistor, 2SA1586-Y
Q411	23314965	Transistor, KTC3198 Y
Q411	A6734590	Transistor, 2SC752(G)TM-Y
Q412	23114530	Transistor, 2SA933S-Q
Q412	A6002030	Transistor, RN1203
Q413	A6734590	Transistor, 2SC752(G)TM-Y
Q415	23318981	IC, MC14053BFEL
Q415	A6002030	Transistor, RN1203
Q416	23314965	Transistor, KTC3198 Y
Q416	A6361770	Transistor, 2SC3437-Y
Q417	23314965	Transistor, KTC3198 Y
Q417	A6361770	Transistor, 2SC3437-Y
Q418	A6004020	Transistor, RN1402
Q420	23316816	IC, LA7860
Q421	A6734590	Transistor, 2SC752(G)TM-Y
Q423	A6002030	Transistor, RN1203
Q424	23904353	IC, AN7712F
Q424	A6361770	Transistor, 2SC3437-Y
Q425	A6361770	Transistor, 2SC3437-Y
Q426	A6335470	Transistor, 2SC2712-Y
Q427	23314962	Transistor, KTA1266 Y
Q470	B01A0156	IC, TA1318N
Q481	B0347235	IC, TA75339AP
Q490	23314965	Transistor, KTC3198 Y
Q491	A6002030	Transistor, RN1203
Q501	B0386049	IC, TA1270AF(J)
Q502	23000263	IC, BU4053BCF-E2
Q503	A6549570	Transistor, 2SA1586-Y
Q504	23314993	Transistor, 2SC4081T106Q
Q510	B01A0150	IC, TA1316N
Q520	23114530	Transistor, 2SA933S-Q
Q521	23114530	Transistor, 2SA933S-Q
Q522	23114530	Transistor, 2SA933S-Q
Q523	A6335470	Transistor, 2SC2712-Y
Q524	A6004010	Transistor, RN1401
Q525	A6004010	Transistor, RN1401
Q526	A6004010	Transistor, RN1401
Q527	A6541130	Transistor, 2SA1162-Y
Q528	A6541130	Transistor, 2SA1162-Y
Q529	A6541130	Transistor, 2SA1162-Y
Q601	B0376885	IC, TA8216H
Q612	A6541130	Transistor, 2SA1162-Y
Q621	23000381	IC, CXA2021S
Q622	B01A0119	IC, TA1304F(EL)
Q661	A6359870	Transistor, 2SC3326-B
Q662	A6359870	Transistor, 2SC3326-B
Q663	23906596	IC, BA4558
Q664	A6014040	Transistor, RN2404
Q681	A6359870	Transistor, 2SC3326-B
Q682	A6359870	Transistor, 2SC3326-B
Q706	23114528	Transistor, 2SC1740S, Q
Q707	A6734590	Transistor, 2SC752(G)TM Y
Q709	23114528	Transistor, 2SC1740S, Q
Q710	23114530	Transistor, 2SA933S-Q
Q711	23314911	Transistor, 2SB1569A E
Q711B	70391355	Screw, BITTB3X8 SZN
Q712	23314914	Transistor, 2SD2400A E
Q712B	70391355	Screw, BITTB3X8 SZN
Q719	23114528	Transistor, 2SC1740S, Q
Q720	23114528	Transistor, 2SC1740S, Q
Q751	23905094	IC, STR392-110
Q752	23905094	IC, STR392-110
Q755	23904521	IC, AN7805
Q757	A6335470	Transistor, 2SC2712-Y
Q758	A6335470	Transistor, 2SC2712-Y

Location No.	Part No.	Description
Q759	A6541130	Transistor, 2SA1162-Y
Q760	23114530	Transistor, 2SA933S-Q
Q761	23314911	Transistor, 2SB1569A E
Q761	A6541130	Transistor, 2SA1162-Y
Q761B	70391355	Screw, BITTB3X8 SZN
Q762	A6335470	Transistor, 2SC2712-Y
Q764	B0485884	IC, TC74HC14AF
Q765	A6335470	Transistor, 2SC2712-Y
Q766	A6335470	Transistor, 2SC2712-Y
Q767	B0488448	IC, TC74HC4066AF
Q769	23114528	Transistor, 2SC1740S, Q
Q771	23314914	Transistor, 2SD2400A E
Q771B	70391355	Screw, BITTB3X8 SZN
Q772	A6541130	Transistor, 2SA1162-Y
Q773	A6335470	Transistor, 2SC2712-Y
Q779	23114528	Transistor, 2SC1740S, Q
Q781	23114528	Transistor, 2SC1740S, Q
Q782	23114530	Transistor, 2SA933S-Q
Q782	23318840	IC, AN79M05F
Q783	23114528	Transistor, 2SC1740S, Q
Q784	23314911	Transistor, 2SB1569A E
Q784B	70391355	Screw, BITTB3X8 SZN
Q785	23314914	Transistor, 2SD2400A E
Q785B	70391355	Screw, BITTB3X8 SZN
Q796	A6335470	Transistor, 2SC2712-Y
Q797	B0352035	IC, TA75S393F
Q798	A6030110	IC, TC4S66F
Q799	A6030110	IC, TC4S66F
Q801	23135015	IC, STR-Z4369
Q820	23314965	Transistor, KTC3198 Y
Q821	A6000050	Transistor, RN1005
Q830	23904163	IC, SI-3090CA
Q831	23905976	IC, PQ05RD11
Q840	23906689	IC, PQ05RD11
Q840B	70391356	Screw, BITTB3X10 SZN
Q843	A6002060	Transistor, RN1206
Q862	A8643112	Photo Coupler, TLP621(GRL-L
Q901	A6372621	Transistor, 2SC5360
Q902	A6317440	Transistor, 2SC1815-Y
Q911	A6372621	Transistor, 2SC5360
Q912	A6317440	Transistor, 2SC1815-Y
Q913	A6534145	Transistor, 2SA1020-Y(C)
Q914	A6317440	Transistor, 2SC1815-Y
Q915	A6317440	Transistor, 2SC1815-Y
Q916	A6317440	Transistor, 2SC1815-Y
Q917	A6317440	Transistor, 2SC1815-Y
Q918	A6317440	Transistor, 2SC1815-Y
Q919	A6317440	Transistor, 2SC1815-Y
Q920	A6317440	Transistor, 2SC1815-Y
Q921	A6372621	Transistor, 2SC5360
Q922	A6317440	Transistor, 2SC1815 Y
Q961	A6317440	Transistor, 2SC1815-Y
Q962	A6534145	Transistor, 2SA1020-Y(C)
Q963	A6317440	Transistor, 2SC1815-Y
Q964	A6534040	Transistor, 2SA1015-Y
Q965	A6317440	Transistor, 2SC1815-Y
Q966	A6534040	Transistor, 2SA1015-Y
Q968	A6317440	Transistor, 2SC1815-Y
Q971	A6534040	Transistor, 2SA1015-Y
Q972	A6534040	Transistor, 2SA1015-Y
Q973	A6534145	Transistor, 2SA1020-Y(C)
Q974	A6317440	Transistor, 2SC1815-Y
Q975	A6734590	Transistor, 2SC752(G)TM-Y
QA01	23000532	IC, MN102L35GFE

Location No.	Part No.	Description
QA02	23906642	IC, AT24C64-10PC
QA04	23905321	IC, 24LC16B-I/P
QA05	70119743	IC, PST523D
QA71	A6541130	Transistor, 2SA1162-Y (56H80)
QB01	23114528	Transistor, 2SC1740S, Q (40H80)
QB03	A6004050	Transistor, RN1405
QB11	23114528	Transistor, 2SC1740S, Q (56H80)
QB14	A6541130	Transistor, 2SA1162-Y
QB30	23314965	Transistor, KTC3198 Y
QB61	A6361770	Transistor, 2SC3437-Y
QB84	A6335470	Transistor, 2SC2712-Y
QB85	A6541130	Transistor, 2SA1162-Y
QB86	A6541130	Transistor, 2SA1162-Y
QB87	A6541130	Transistor, 2SA1162-Y
QB88	A6541130	Transistor, 2SA1162-Y
QD01	B01A0107	IC, TA2136N
QH001	B01B4088	IC, TC190C060AF-
QH004	B0485893	IC, TC74HC244AF
QH005	23905013	IC, TLC29321PW
QH006	23906908	IC, MC33078DR2
QH120	23318897	IC, PCM56P-L
QH121	23318897	IC, PCM56P-L
QH140	23318897	IC, PCM56P-L
QH141	23318897	IC, PCM56P-L
QH160	23318897	IC, PCM56P-L
QH161	23318897	IC, PCM56P-L
QH170	23906909	IC, MC33079DR2
QH171	23906909	IC, MC33079DR2
QH172	23906909	IC, MC33079DR2
QH173	23905320	IC, NM24C16EN
QH174	23904666	IC, NM24C08EN
QH177	23904743	IC, LC89066M
QR02	A6335470	Transistor, 2SC2712-Y
QR03	A6004020	Transistor, RN1402
QR14	A6541130	Transistor, 2SA1162-Y
QR15	A6541130	Transistor, 2SA1162-Y
QR16	A6541130	Transistor, 2SA1162-Y
QS01	A6342200	Transistor, 2CS2878-A
QS11	A6342200	Transistor, 2CS2878-A
QS12	A6012040	Transistor, RN2204
QS13	23314965	Transistor, KTC3198 Y
QS14	23314965	Transistor, KTC3198 Y
QV01	B0384761	IC, TA8851CN
QV10	23114528	Transistor, 2SC1740S, Q
QV20	A6002040	Transistor, RN1204
QV21	23114528	Transistor, 2SC1740S, Q
QV22	23114530	Transistor, 2SA933S-Q
QV23	23114530	Transistor, 2SA933S-Q
QV28	A6002030	Transistor, RN1203
QV30	23905590	IC, M52055FP
QV31	A6335470	Transistor, 2SC2712-Y
QV37	A6541130	Transistor, 2SA1162-Y
QV38	A6541130	Transistor, 2SA1162-Y
QV39	A6541130	Transistor, 2SA1162-Y
QV48	23114528	Transistor, 2SC1740S, Q
QV49	23114528	Transistor, 2SC1740S, Q
QV501	23318981	IC, MC14053BFEL
QV504	A6549570	Transistor, 2SA1586-Y
QV505	A6549570	Transistor, 2SA1586-Y
QV506	A6549570	Transistor, 2SA1586-Y
QV507	A6549570	Transistor, 2SA1586-Y
QV508	A6549570	Transistor, 2SA1586-Y

Location No.	Part No.	Description
QV509	A6549570	Transistor, 2SA1586-Y
QV524	23314993	Transistor, 2SC4081T106Q
QW05	A6335470	Transistor, 2SC2712-Y
QW08	A6335470	Transistor, 2SC2712-Y
QW11	A6335470	Transistor, 2SC2712-Y
QW17	A6002010	Transistor, RN1201
QX11	23905770	IC, PQ3RF23
QX101	23314993	Transistor, 2SC4081T106Q
QX102	23314347	Transistor, IMX2 T108
QX103	23314993	Transistor, 2SC4081T106Q
QX104	23314993	Transistor, 2SC4081T106Q
QX108	23314993	Transistor, 2SC4081T106Q
QX109	A6030670	IC, TC7S66F
QX110	A6549570	Transistor, 2SA1586-Y
QX131	23314993	Transistor, 2SC4081T106Q
QX132	23314347	Transistor, IMX2 T108
QX133	23314993	Transistor, 2SC4081T106Q
QX134	23314993	Transistor, 2SC4081T106Q
QX138	23314993	Transistor, 2SC4081T106Q
QX139	A6030670	IC, TC7S66F
QX140	A6549570	Transistor, 2SA1586-Y
QX161	23314993	Transistor, 2SC4081T106Q
QX162	23314347	Transistor, IMX2 T108
QX163	23314993	Transistor, 2SC4081T106Q
QX164	23314993	Transistor, 2SC4081T106Q
QX168	23314993	Transistor, 2SC4081T106Q
QX169	A6030670	IC, TC7S66F
QX170	A6549570	Transistor, 2SA1586-Y
QX191	23000197	IC, SN74AHC2G53H
QX192	23314345	Transistor, IMZ1 T108
QX195	A6030695	IC, TC7SH32FU(BR
QX196	A6030695	IC, TC7SH32FU(BR
QX201	23314993	Transistor, 2SC4081T106Q
QX202	23314993	Transistor, 2SC4081T106Q
QX211	23000283	IC, R1121N331B-T
QX219	A6030670	IC, TC7S66F
QX220	23905939	IC, TLC2933IPW
QX221	A6030620	IC, TC7S04F
QX231	23000283	IC, R1121N331B-T
QX240	23905013	IC, TLC29321PW
QX241	A6030620	IC, TC7S04F
QX300	23000365	IC, TC90A63F
QX310	23000198	IC, EM636327Q-8
QX322	23314352	Transistor, IMT2 T108
QX332	23314352	Transistor, IMT2 T108
QX470	B0487819	IC, TC74HCT32AF
QX471	23314993	Transistor, 2SC4081T106Q
QX472	23314993	Transistor, 2SC4081T106Q
QX521	A6549570	Transistor, 2SA1586-Y
QX522	A6549570	Transistor, 2SA1586-Y
QX531	A6549570	Transistor, 2SA1586-Y
QX532	A6549570	Transistor, 2SA1586-Y
QX541	A6549570	Transistor, 2SA1586-Y
QX542	A6549570	Transistor, 2SA1586-Y
QX904	23314993	Transistor, 2SC4081T106Q
QX910	23000263	IC, BU4053BCF-E2
QX951	23000263	IC, BU4053BCF-E2
QX952	23314993	Transistor, 2SC4081T106Q
QX953	23314993	Transistor, 2SC4081T106Q
QY01	B0386049	IC, TA1270AF(J)
QY03	A7010005	IC, TC90A66F(BR,
QY06	23000408	IC, 1V04166-30TB
QY10	A6549570	Transistor, 2SA1586-Y
QY12	A6549570	Transistor, 2SA1586-Y

Location No.	Part No.	Description
QY20	23000376	IC, BA033LBSG-TR
QY21	23000283	IC, R1121N331B-T
QY30	23314993	Transistor, 2SC4081T106Q
QY101	A6549570	Transistor, 2SA1586-Y
QY104	23314993	Transistor, 2SC4081T106Q
QY105	23314993	Transistor, 2SC4081T106Q
QY106	23314993	Transistor, 2SC4081T106Q
QY107	A6549570	Transistor, 2SA1586-Y
QY108	A6549570	Transistor, 2SA1586-Y
QY109	A6549570	Transistor, 2SA1586-Y
QY116	23314993	Transistor, 2SC4081T106Q
QY207	A6549570	Transistor, 2SA1586-Y
QY208	A6549570	Transistor, 2SA1586-Y
QY209	A6549570	Transistor, 2SA1586-Y
QY260	23114528	Transistor, 2SC1740S, Q
QY300	23000366	IC, TLC2943IDB
QY301	A6030630	IC, TC7S08F
QY302	A6030670	IC, TC7S66F
QY330	23905939	IC, TLC2933IPW
QY331	A6030620	IC, TC7S04F
QY332	A6030670	IC, TC7S66F
QY333	A6030898	IC, TC4W53FU(BRA
QY341	A6030620	IC, TC7S04F
QY342	A6030670	IC, TC7S66F
QY382	23314993	Transistor, 2SC4081T106Q
QY501	23318981	IC, MC14053BFEL
QY504	A6549570	Transistor, 2SA1586-Y
QY505	A6549570	Transistor, 2SA1586-Y
QY506	A6549570	Transistor, 2SA1586-Y
QY507	A6549570	Transistor, 2SA1586-Y
QY508	A6549570	Transistor, 2SA1586-Y
QY509	A6549570	Transistor, 2SA1586-Y
QY524	23314993	Transistor, 2SC4081T106Q
QY700	B0386238	IC, TA1287F
QY721	23314993	Transistor, 2SC4081T106Q
QY722	23314993	Transistor, 2SC4081T106Q
QY723	23314993	Transistor, 2SC4081T106Q
QY751	23314993	Transistor, 2SC4081T106Q
QY752	23314993	Transistor, 2SC4081T106Q
QY753	23314993	Transistor, 2SC4081T106Q
QY760	23314993	Transistor, 2SC4081T106Q
QZ01	23000108	IC, μPD64082
QZ02	23000438	IC, B416256A-35J
QZ04	A6549570	Transistor, 2SA1586-Y
QZ05	A6549570	Transistor, 2SA1586-Y
QZ06	23314993	Transistor, 2SC4081T106Q
QZ14	A6549570	Transistor, 2SA1586-Y
QZ16	23314993	Transistor, 2SC4081T106Q
QZ17	A6549570	Transistor, 2SA1586-Y
QZ18	23314993	Transistor, 2SC4081T106Q
QZ20	23314993	Transistor, 2SC4081T106Q
QZ21	23314993	Transistor, 2SC4081T106Q
QZ22	23314993	Transistor, 2SC4081T106Q
QZ23	A6549570	Transistor, 2SA1586-Y
QZ24	23314993	Transistor, 2SC4081T106Q
QZ100	B0410868	IC, TC90A45F
QZ101	23314993	Transistor, 2SC4081T106Q
QZ102	23314993	Transistor, 2SC4081T106Q
QZ103	A6549570	Transistor, 2SA1586-Y
D101	23316756	Diode, Zener, MTZJ33D
D215	23118041	Diode, MA111-(TX)
D216	23118041	Diode, MA111-(TX)
D217	23118041	Diode, MA111-(TX)
D218	23118041	Diode, MA111-(TX)

Location No.	Part No.	Description
D219	23118041	Diode, MA111-(TX)
D220	23118041	Diode, MA111-(TX)
D301	23316682	Diode, Zener, MTZJ7.5C
D302	23118094	Diode, EU2A, LF-F10
D303	23316732	Diode, Zener, MTZJ18C
D304	23316794	Diode, SC570ALFE2
D305	23118822	Diode, ERB12-02
D306	23118822	Diode, ERB12-02
D307	23118859	Diode, 1SS133
D310	23118041	Diode, MA111-(TX)
D336	23118859	Diode, 1SS133
D337	23118859	Diode, 1SS133
D401	23118094	Diode, EU2A, LF-F10
D402	23118094	Diode, EU2A, LF-F10
D403	23224366	Diode, FMQ-3GU
D404	23316254	Diode, ERC06-15L
D406	23118094	Diode, EU2A, LF-F10
D407	23316731	Diode, Zener, MTZJ18B
D408	A7978850	Diode, S5295G
D411	23316666	Diode, Zener, MTZJ4.7B
D412	23118041	Diode, MA111-(TX)
D412	23118094	Diode, EU2A, LF-F10
D413	23118041	Diode, MA111-(TX)
D413	23118707	Diode, RP 1H, LF-C1
D414	23118041	Diode, MA111-(TX)
D415	23118041	Diode, MA111-(TX)
D415	23118707	Diode, RP 1H, LF-C1
D416	23118041	Diode, MA111-(TX)
D417	23316591	Diode, Zener, MA8100-M, TX
D418	23316591	Diode, Zener, MA8100 M, TX
D435	23118094	Diode, EU2A, LF-F10
D436	23118094	Diode, EU2A, LF-F10
D441	23118859	Diode, 1SS133
D442	23316731	Diode, Zener, MTZJ18B
D444	23118859	Diode, 1SS133
⚠D482	23115774	Diode, Zener, RD6.2E(4)
D520	23316647	Diode, Zener, MTZJ2.0B
D521	23118041	Diode, MA111-(TX)
D522	23118041	Diode, MA111-(TX)
D523	23118041	Diode, MA111-(TX)
D531	23316573	Diode, Zener, MA8062-L, TX
D532	23118822	Diode, ERB12-02
D533	23316686	Diode, Zener, MTZJ9.1A
D534	23316792	Diode, SC215
D601	23118041	Diode, MA111-(TX)
D602	23118041	Diode, MA111-(TX)
D603	23118041	Diode, MA111-(TX)
D604	23118041	Diode, MA111-(TX)
D607	23316616	Diode, Zener, MA8220-M, TX
D608	23316616	Diode, Zener, MA8220-M, TX
D611	23118041	Diode, MA111 (TX)
D612	23118041	Diode, MA111-(TX)
D661	23316570	Diode, Zener, MA8056-L, TX
D704	23118859	Diode, 1SS133
D705	23118859	Diode, 1SS133
D715	23118859	Diode, 1SS133
D721	23118859	Diode, 1SS133
D761	23118859	Diode, 1SS133
D762	23118859	Diode, 1SS133
D763	23118859	Diode, 1SS133
D764	23118859	Diode, 1SS133
D781	23118859	Diode, 1SS133
D782	23118859	Diode, 1SS133
D783	23118859	Diode, 1SS133

Location No.	Part No.	Description
D784	23118859	Diode, 1SS133
D801	23316787	Diode, D15XB60H, F5
D811	23316688	Diode, Zener, MTZJ9.1C
D813	23316665	Diode, Zener, MTZJ4.7A
D822	23316672	Diode, Zener, MTZJ5.6B
D823	23316672	Diode, Zener, MTZJ5.6B
D830	23115532	Diode, ERB12-01E
D831	23115532	Diode, ERB12-01E
D840	23316962	Diode, S1WBA20 4101
D841	23316745	Diode, Zener, MTZJ27A
D843	23118859	Diode, 1SS133
D844	23316688	Diode, Zener, MTZJ9.1C
D845	23316679	Diode, Zener, MTZJ6.8C
D846	23118859	Diode, 1SS133
D851	23357215	Diode, D4SBS6
D858	23118859	Diode, 1SS133
D859	23118859	Diode, 1SS133
D862	23118057	Diode, AG01A
D863	23316553	Diode, 1SS145
D864	23118060	Diode, AL01Z
D873	23316747	Diode, Zener, MTZJ27C
D875	23316688	Diode, Zener, MTZJ9.1C
D876	23316753	Diode, Zener, MTZJ33A
D877	23316747	Diode, Zener, MTZJ27C
D878	23316686	Diode, Zener, MTZJ9.1A
D884	23357217	Diode, D4SBL40
D885	23357216	Diode, D4SBL20U
D891	23357214	Diode, D4SBS4
D892	23316768	Diode, FMB-26L
D899	24000948	Varistor, TNR15G391K
D901	23118859	Diode, 1SS133
D902	23118859	Diode, 1SS133
D911	23118859	Diode, 1SS133
D912	23118859	Diode, 1SS133
D916	A7568250	Diode, 1S1834
D921	23118859	Diode, 1SS133
D922	23118859	Diode, 1SS133
D924	23118859	Diode, 1SS133
D925	23118859	Diode, 1SS133
D931	23118859	Diode, 1SS133
D932	23118859	Diode, 1SS133
D933	23118859	Diode, 1SS133
D934	23118859	Diode, 1SS133
D936	A7568250	Diode, 1S1834
D941	23118859	Diode, 1SS133
D942	23118859	Diode, 1SS133
D943	23118859	Diode, 1SS133
D946	23118859	Diode, 1SS133
D948	23118859	Diode, 1SS133
D961	23118859	Diode, 1SS133
D962	23118859	Diode, 1SS133
D963	23118859	Diode, 1SS133
D964	23118859	Diode, 1SS133
D965	23118859	Diode, 1SS133
D966	23118859	Diode, 1SS133
D967	A7568250	Diode, 1S1834
D7701	23118041	Diode, MA111-(TX)
D7702	23118859	Diode, 1SS133
D7705	23118041	Diode, MA111-(TX)
D7706	23118041	Diode, MA111-(TX)
D7707	23118041	Diode, MA111-(TX)
D7708	23118041	Diode, MA111-(TX)
D7709	23316675	Diode, Zener, MTZJ6.2B
D7714	23118041	Diode, MA111-(TX)

Location No.	Part No.	Description
D7715	23118041	Diode, MA111-(TX)
D7716	23118041	Diode, MA111-(TX)
D7717	23316675	Diode, Zener, MTZJ6.2B
D7718	23316675	Diode, Zener, MTZJ6.2B
D7719	23316675	Diode, Zener, MTZJ6.2B
D7730	23118538	Diode, Zener, RD6.2ESA B2
D7736	23118538	Diode, Zener, RD6.2ESA B2
D7738	23118859	Diode, 1SS133
D7739	23118859	Diode, 1SS133
D7740	23118859	Diode, 1SS133
D7741	23118859	Diode, 1SS133
D7742	23118859	Diode, 1SS133
D7743	23118859	Diode, 1SS133
D7745	23118859	Diode, 1SS133
D7746	23118859	Diode, 1SS133
D7747	23118859	Diode, 1SS133
D7748	23118859	Diode, 1SS133
D7749	23118859	Diode, 1SS133
D7760	23118859	Diode, 1SS133
D7805	23118041	Diode, MA111-(TX)
D7806	23118041	Diode, MA111-(TX)
DA02	23316574	Diode, Zener, MA8062-M, TX
DA11	23118859	Diode, 1SS133
DA12	23316669	Diode, Zener, MTZJ5.1B
DA34	23118041	Diode, MA111-(TX)
DA43	23118041	Diode, MA111-(TX)
DA44	23118041	Diode, MA111-(TX)
DA45	23118041	Diode, MA111-(TX)
DA46	23118041	Diode, MA111-(TX)
DB01	23358501	Diode (LED), SCL003URC5F (40H80)
DB10	23316574	Diode, Zener, MA8062-M, TX
DB11	23118041	Diode, MA111-(TX)
DB11	23358501	Diode (LED), SCL003URC5F (56H80)
DB12	23118041	Diode, MA111-(TX)
DB13	23118041	Diode, MA111-(TX)
DB13	23358522	Diode (LED), SIR-56SB3F
DB14	23118041	Diode, MA111-(TX)
DB30	23118859	Diode, 1SS133
DB42	23316574	Diode, Zener, MA8062-M, TX
DB61	23118041	Diode, MA111-(TX)
DH001	23316675	Diode, Zener, MTZJ6.2B
DH002	23316675	Diode, Zener, MTZJ6.2B
DH003	23316675	Diode, Zener, MTZJ6.2B
DV01	23316686	Diode, Zener, MTZJ9.1A
DV02	23316686	Diode, Zener, MTZJ9.1A
DV03	23316686	Diode, Zener, MTZJ9.1A
DV07	23316686	Diode, Zener, MTZJ9.1A
DV08	23316686	Diode, Zener, MTZJ9.1A
DV09	23316686	Diode, Zener, MTZJ9.1A
DV11	23316686	Diode, Zener, MTZJ9.1A
DV12	23316686	Diode, Zener, MTZJ9.1A
DV13	23316686	Diode, Zener, MTZJ9.1A
DV17	23316686	Diode, Zener, MTZJ9.1A
DV18	23316686	Diode, Zener, MTZJ9.1A
DV25	23118859	Diode, 1SS133
DV161	23316686	Diode, Zener, MTZJ9.1A
DV162	23316686	Diode, Zener, MTZJ9.1A
DV163	23316686	Diode, Zener, MTZJ9.1A
DX11	23115532	Diode, ERB12-01E
DX12	23115532	Diode, ERB12-01E

Location No.	Part No.	Description
MISCELLANEOUS		
B224	23035412	Screw, BTB 4X12 SZN
B225	23035412	Screw, BTB 4X12 SZN
B230	23037312	Screw, BTBW 3X12 SZN
B233	23035412	Screw, BTB 4X12 SZN
B234	23035412	Screw, BTB 4X12 SZN
B235	23035310	Screw, BTB 3X8 SZN
B236	23035412	Screw, BTB 4X12 SZN
BB30	23903022	Socket, 8P
BB31	23903022	Socket, 8P
BB300	23368627	Plug, 8P
F470	23144624	Fuse, 2.0A, 125V
F801	23144481	Fuse, 7.0A, 125V
F801A	23165433	Holder, Fuse
F850	23144629	Fuse, 6.3A, 125V
F851	23144629	Fuse, 6.3A, 125V
F860	23144626	Fuse, 4.0A, 125V
F889	23144626	Fuse, 4.0A, 125V
F890	23144625	Fuse, 3.15A, 125V
F891	23144627	Fuse, 5.0A, 125V
G101	24872101	Chip, 100 ohm, 1/16W
G102	24872101	Chip, 100 ohm, 1/16W
GJ01	24000824	Chip Jumper, 2125Type
GJ01	24000824	Chip Jumper, 2125Type
GJ02	24000824	Chip Jumper, 2125Type
GJ03	24000445	Chip Jumper, 1680 Type
GJ04	24000445	Chip Jumper, 1680 Type
GJ04	24000824	Chip Jumper, 2125Type
GJ05	24000445	Chip Jumper, 1680 Type
GJ05	24000824	Chip Jumper, 2125Type
GJ05	24000824	Chip Jumper, 2125Type
GJ06	24000445	Chip Jumper, 1680 Type
GJ06	24000824	Chip Jumper, 2125Type
GJ07	24000824	Chip Jumper, 2125Type
GJ10	24000824	Chip Jumper, 2125Type
GJ11	24000824	Chip Jumper, 2125Type
GJ14	24000824	Chip Jumper, 2125Type
GJ15	24000824	Chip Jumper, 2125Type
GJ16	24000445	Chip Jumper, 1680 Type
GJ25	24000445	Chip Jumper, 1680 Type
GJ501	24000445	Chip Jumper, 1680 Type
H003	23344422	RF Switch, RSU134X1
H003A	23740989	Nut, F-Connector
J501	24000824	Chip Jumper, 2125Type
JM03	24000445	Chip Jumper, 1680 Type
JM04	24000445	Chip Jumper, 1680 Type
JM06	24000445	Chip Jumper, 1680 Type
JM07	24000445	Chip Jumper, 1680 Type
JR02	24000445	Chip Jumper, 1680 Type
JV504	24000445	Chip Jumper, 1680 Type
JX101	24000445	Chip Jumper, 1680 Type
JX206	24000445	Chip Jumper, 1680 Type
JX207	24000445	Chip Jumper, 1680 Type
JX222	24000445	Chip Jumper, 1680 Type
JX226	24000445	Chip Jumper, 1680 Type
JX242	24000445	Chip Jumper, 1680 Type
JX246	24109103	Chip, 0.01μF, ±10%, 25V
JX475	24000445	Chip Jumper, 1680 Type
JX811	24000445	Chip Jumper, 1680 Type
JX812	24000445	Chip Jumper, 1680 Type
JY02	24000445	Chip Jumper, 1680 Type
JY19	24000445	Chip Jumper, 1680 Type
JY20	24000445	Chip Jumper, 1680 Type
JY22	24000445	Chip Jumper, 1680 Type

Location No.	Part No.	Description
JY26	24000445	Chip Jumper, 1680 Type
JY27	24000445	Chip Jumper, 1680 Type
JY29	24000445	Chip Jumper, 1680 Type
JY201	24000445	Chip Jumper, 1680 Type
JY301	24000445	Chip Jumper, 1680 Type
JY504	24000445	Chip Jumper, 1680 Type
JZ01	24000445	Chip Jumper, 1680 Type
JZ02	24000576	Chip Jumper, 3216 type
JZ03	24000445	Chip Jumper, 1680 Type
KB11	23904946	Remote Sensor, RPM-676CBR-S
P350	23368634	Plug, 25P
P410	23903025	Socket, 25P
P540	23903040	Socket, 56P
P601	23902213	Socket, B-B, 10P
P708	23902655	Socket, B-B, 15P
P709	23902655	Socket, B-B, 15P
P713	23164787	Plug, 7P
P714	23164787	Plug, 7P
P715	23164787	Plug, 7P
P801	23372117	Power Cord
P908	23367329	Plug, 1P (40H80)
P909	23367329	Plug, 1P (40H80)
P910	23367329	Plug, 1P (40H80)
PB22	23368578	Plug, 4P (40H80)
PD02	23368130	Plug, 10P
PH001	23367724	Plug, B-B,15P
PH002	23367724	Plug, B-B,15P
PV02	23365819	Jack, 1S3P
PV04	23365907	Jack, 5P
PV06	23903040	Socket, 56P
PV60	23367069	Plug, 9P (40H80)
S602	23145412	Switch, Slide, 2C2P
SA01	23145226	Switch, Push, 1C1P (40H80)
SA02	23145226	Switch, Push, 1C1P (40H80)
SA03	23145226	Switch, Push, 1C1P (40H80)
SA04	23145226	Switch, Push, 1C1P (40H80)
SA05	23145226	Switch, Push, 1C1P (40H80)
SA06	23145226	Switch, Push, 1C1P (40H80)
SA07	23145226	Switch, Push, 1C1P (40H80)
SA08	23145226	Switch, Push, 1C1P (40H80)
SA09	23145226	Switch, Push, 1C1P (40H80)
SA11	23145226	Switch, Push, 1C1P (56H80)
SA12	23145226	Switch, Push, 1C1P (56H80)
SA13	23145226	Switch, Push, 1C1P (56H80)
SA14	23145226	Switch, Push, 1C1P (56H80)
SA15	23145226	Switch, Push, 1C1P (56H80)
SA16	23145226	Switch, Push, 1C1P (56H80)
SA17	23145226	Switch, Push, 1C1P (56H80)
SA18	23145226	Switch, Push, 1C1P (56H80)
SR41	23146558	Relay, DC12V
SR42	23146570	Relay, DC12V
SR81	23146574	Relay, DLS5D1-O(M) 0.15W
SR82	23146574	Relay, DLS5D1-O(M) 0.15W
V901A	23902019	Socket, CRT, 9P
V902A	23902019	Socket, CRT, 9P
V903A	23902019	Socket, CRT, 9P
W661	23151232	Speaker, SPK-1235, 160X160mm, 8 ohm (56H80)
W661	23351131	Speaker, SPK-1390, 120X120mm, 16 ohm (40H80)
W662	23151232	Speaker, SPK-1235, 160X160mm, 8 ohm (56H80)

Location No.	Part No.	Description
W662	23351131	Speaker, SPK-1390, 120X120mm, 16 ohm (40H80)
X401	23153721	Ceramic Resonator, 503kHz, TCR1023
X501	23153961	Crystal, 3.58MHz
X4401	23153721	Ceramic Resonator, 503kHz, TCR1023
X4402	23153721	Ceramic Resonator, 503kHz, TCR1023
XA01	23153533	Ceramic Resonator, 8.00MHz, TCR1082AM
XB01	23153011	Ceramic Resonator, 4.00MHz, TCR1050
XM01	23153529	Crystal, 20 MHz
XY01	23153961	Crystal, 3.58MHz
XY03	23153721	Ceramic Resonator, 503kHz, TCR1023
Z401	24082996	CR Block, TPA5007RH
Z405	23140203	SG-GAP, SG99B3EN
Z410	23110842	Focus Pack, TPA6031
Z410A	23505177	Focus Cable
Z450A	23504953	Anode Cable
⚠Z801	23148734	Module, HIC1026A, PROTECTOR, HIC1026
ZA01	23262286	Coil, IF, TRF1237AH
ZH001	23103823	Filter, TEM2027D
ZH002	23103823	Filter, TEM2027D
ZH121	23103823	Filter, TEM2027D
ZH122	23103823	Filter, TEM2027D
ZH141	23103823	Filter, TEM2027D
ZH142	23103823	Filter, TEM2027D
ZH161	23103823	Filter, TEM2027D
ZH162	23103823	Filter, TEM2027D
ZX110	23103823	Filter, TEM2027D
ZX190	23103823	Filter, TEM2027D
ZX221	23103823	Filter, TEM2027D
ZX241	23103823	Filter, TEM2027D
ZX521	23103823	Filter, TEM2027D
ZX531	23103823	Filter, TEM2027D
ZX541	23103823	Filter, TEM2027D
ZX821	23246199	Chip (Ferrite Bead), TRF42R2CG
ZX822	23246195	Chip (Ferrite Bead), TRF41R0CG
ZX823	23246195	Chip (Ferrite Bead), TRF41R0CG
ZY300	23103823	Filter, TEM2027D
ZY330	23103823	Filter, TEM2027D
ZY340	23103823	Filter, TEM2027D

PC BOARD ASSEMBLIES

✻E031Z	CRT-D/R Board, PB9586D1 (56H80)
✻E031Z	CRT-D/R Board, PB9586E1 (40H80)
✻E032Z	CRT-D/G Board, PB9586D2 (56H80)
✻E032Z	CRT-D/G Board, PB9586E2 (40H80)
✻E033Z	CRT D/B Board, PB9586D3 (56H80)
✻E033Z	CRT-D/B Board, PB9586E3 (40H80)

Location No.	Part No.	Description
✻ E034Z		SVM-R Board, PB9586D4 (56H80)
✻ E034Z		SVM-R Board, PB9586E4 (40H80)
✻ E034Z		F-CON Board, PB9121B1 (56H80)
✻ E035Z		SVM-G Board, PB9586D5 (56H80)
✻ E035Z		SVM-G Board, PB9586E5 (40H80)
✻ E035Z		F-IN Board, PB9121B2 (56H80)
✻ E036Z		SVM-G Board, PB9586D6 (56H80)
✻ E036Z		SVM-G Board, PB9586E6 (40H80)
✻ E041Z		FRONT-CON Board, PB9652-1 (40H80)
✻ E042Z		FRONT-IN Board, PB9652-2 (40H80)
✻ E043Z		REM Board, PB9652-3 (40H80)
✻ U401		DPC Board, PB9602
✻ U701	23785297	DIGI-CONV Board, PB9585F (56H80)
✻ U701	23785300	DIGI-CONV Board, PB9585G (40H80)
✻ U801		DEF/Power Board, PB9582D (56H80)
✻ U801		DEF/Power Board, PB9582E (40H80)
✻ U901		Signal/CONV Board, PB9581H (56H80)
✻ U901		Signal/CONV Board, PB9581J (40H80)
✻ UD01		SRS Board, PB9587
✻ UV01		A/V Board, PB9583A
✻ UZ01		HYPER PRO. Board, PB9584A

PICTURE TUBE

⚠V901R	23005540	Protector Coupling R (56H80)
⚠V901R	23007004	Protector Coupling R (40H80)
⚠V902G	23005541	Protector Coupling G (56H80)
⚠V902G	23007005	Protector Coupling G (40H80)
⚠V903B	23003818	Protector Coupling B (56H80)
⚠V903B	23003520	Protector Coupling B (40H80)

TUNER

H001	23321389	Tuner, EL956LW
HY01	23321369	Tuner, EL953L

ACCESSORIES

K912	23306370	Remote Hand Unit, CT-90047
Y101	23565016	Owner's Manual, English, 56H80
Y101	23565050	Owner's Manual, English, 40H80
Y101F	23565017	Owner's Manual, French, 56H80
Y101F	23565051	Owner's Manual, French, 40H80

Location No.	Part No.	Description

CABINET PARTS

A001	23411244	Wood Cabinet (56H80)
A001	23411437	Wood Cabinet (40H80)
A102	23527101	Speaker Grille R (56H80)
A102	23527078	Speaker Grille R (40H80)
A103	23527099	Speaker Grille L (56H80)
A103	23527079	Speaker Grille L (40H80)
A112	23413357	Caster Assy (56H80)
A125C	23030937	Screw, BTBW3X12 (56H80)
A145C	23030937	Screw, BTBW3X12 (56H80)
A202	23450288	Control Panel (56H80)
A202	23450306	Control Panel (40H80)
A251	23427716	Door (56H80)
A251	23427680	Door (40H80)
A253	23443965	Knob, Key
A254	23445333	Knob, Power (56H80)
A254	23445280	Knob, Power (40H80)
A257	23836510	Spring, Coil (56H80)
A258	23451976	Push, Catch
A260	23527107	Corner Piece (56H80)
A268	23421991	Front Cover (56H80)
A268	23450119	Front Panel (40H80)
A424	23540258	Back Bord Cover (56H80)
A424	23540263	Back Bord Cover (40H80)
A505	72471068	Screw, BIDT2 4X12BZ
A510	23030815	Screw, PTD #6 X 3/4
A519	23030815	Screw, PTD #6 X 3/4
A521	23030815	Screw, PTD #6 X 3/4
A533	23030815	Screw, PTD #6 X 3/4
A535	23030815	Screw, PTD #6 X 3/4
A539	23030815	Screw, PTD #6 X 3/4
A541	23030815	Screw, PTD #6 X 3/4
A543	72471068	Screw, BIDT2 4X12BZ
A544	23030815	Screw, PTD #6 X 3/4
A701	23525968	Carton (56H80)
A701	23525912	Carton (40H80)
A713	23935646	Clamping PAD (56H80)
A713	23935935	Clamping PAD (40H80)
K111	23430669	Delta, DELTA 51-A/B (56H80)
K111	23430512	Delta, DELTA67-A/B (40H80)
K112	23430669	Delta, DELTA 51-A/B (56H80)
K112	23430512	Delta, DELTA67-A/B (40H80)
K113	23430669	Delta, DELTA 51-A/B (56H80)
K113	23430512	Delta, DELTA67-A/B (40H80)
K501	23430823	Lenti Sheet, SCREEN56KKHL (56H80)
K501	23430821	Lenti Sheet, SCREEN40KK-I (40H80)
K502	23837523	Fresnel Sheet, SCREEN56KH-F (56H80)
K502	23430632	Fresnel Sheet, SCREEN40KJ-F (40H80)
K503	23430829	Screen Protector, SCR-PRO56AK (56H80)
K503	23430828	Screen Protector, SCR-PRO40AK (40H80)
K601	23430653	Millor, MIRROR56J (56H80)
K601	23430648	Millor, MIRROR40J (40H80)

THIS PAGE IS
INTENTIONALLY LEFT
BLANK.

SIGNAL/CONV BOARD PB9581H

BOTTOM (FOIL) SIDE

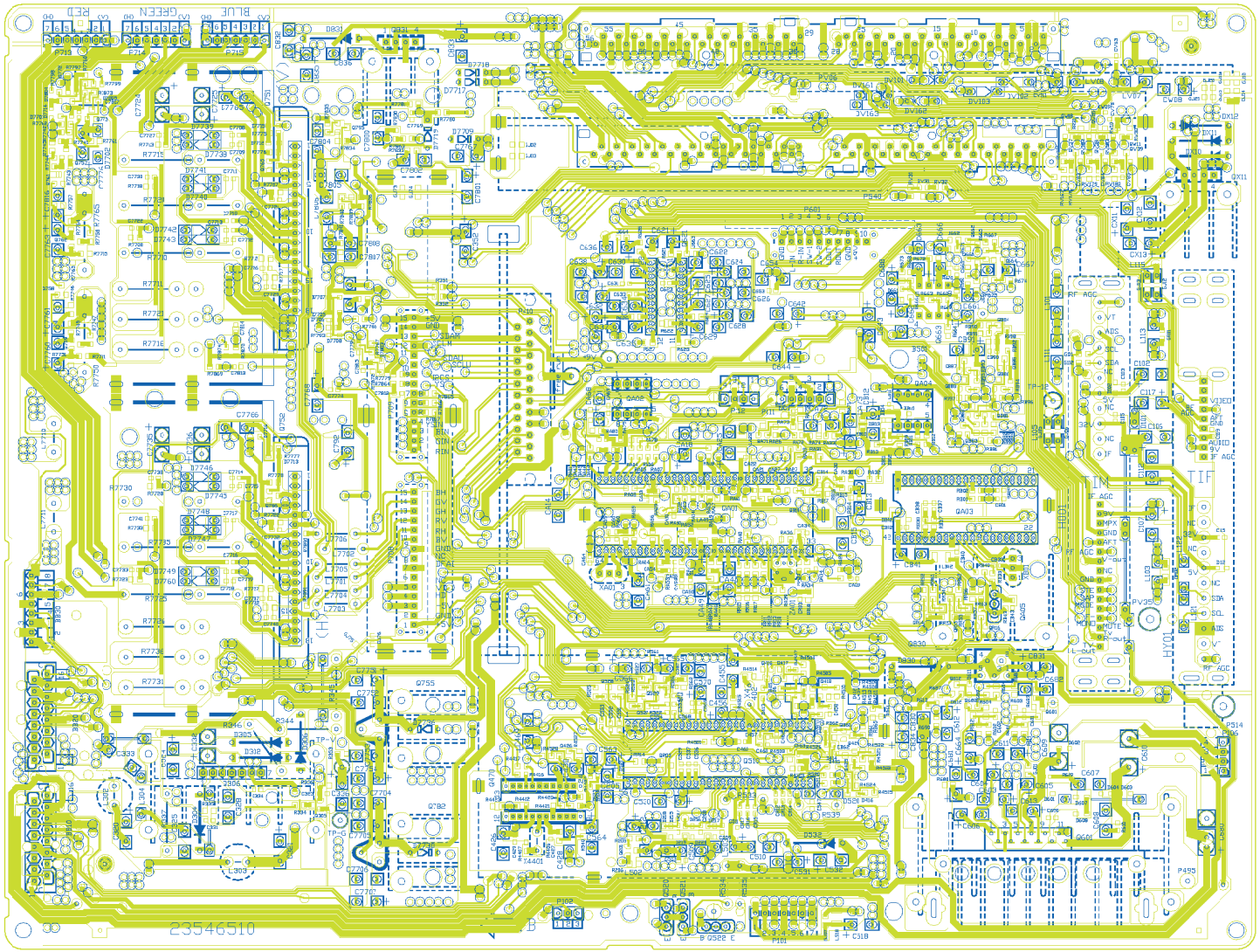

DEF/POWER BOARD PB9582D

BOTTOM (FOIL) SIDE

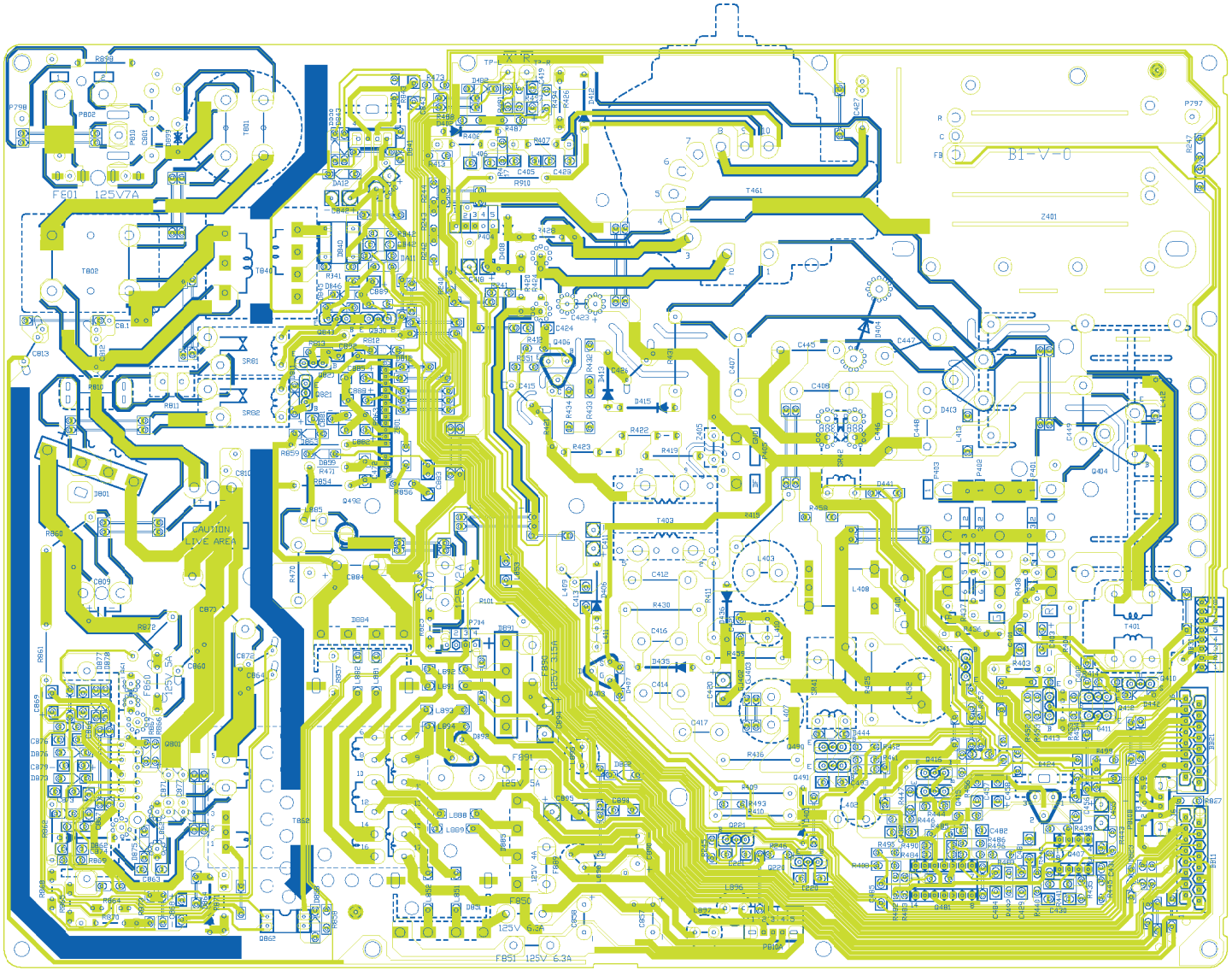

A/V BOARD PB9583A

BOTTOM (FOIL) SIDE

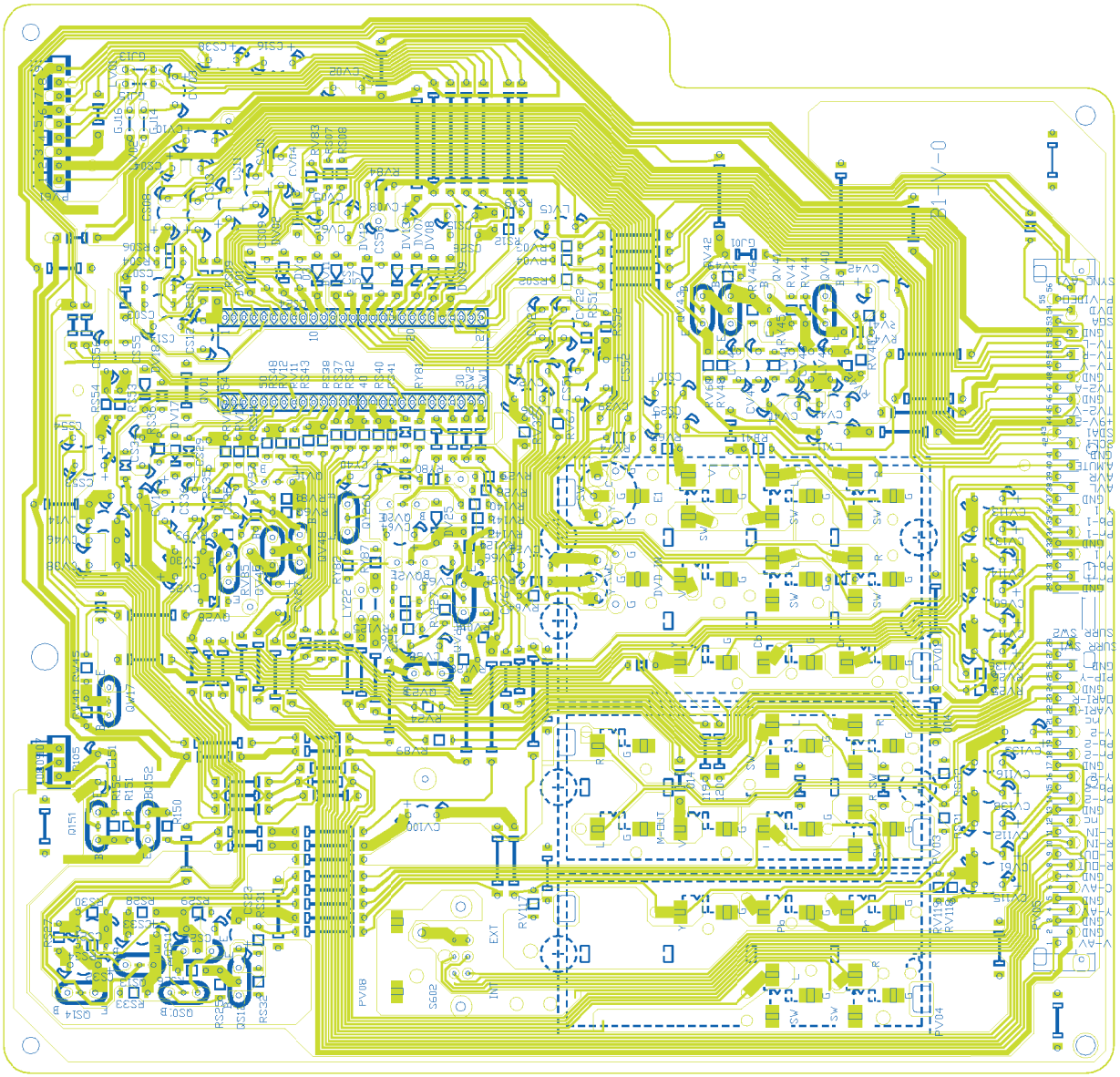

HYPER PRO BOARD PB9584A

BOTTOM (FOIL) SIDE

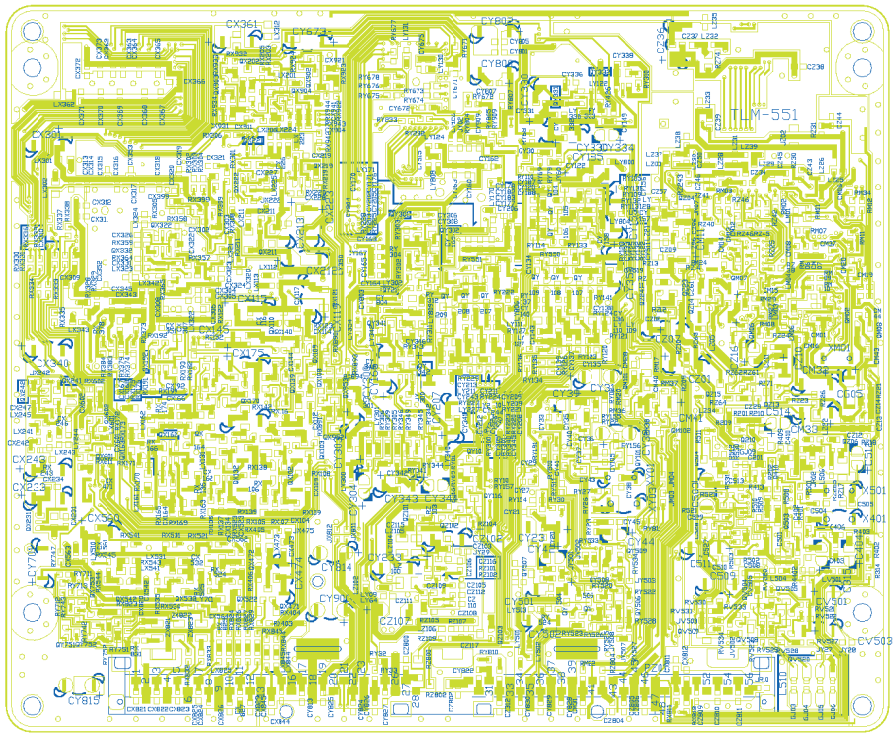

DPC BOARD PB9602

BOTTOM (FOIL) SIDE

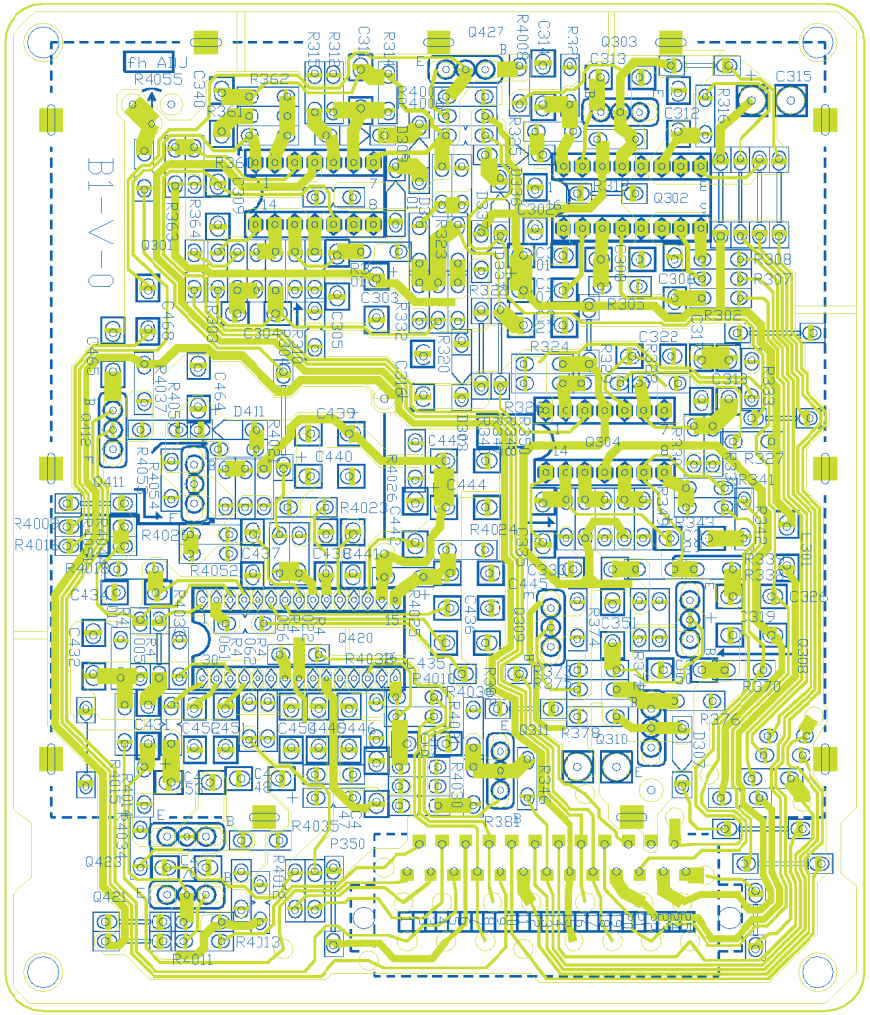

CRT/D-RED BOARD PB9586ZA-1

BOTTOM (FOIL) SIDE

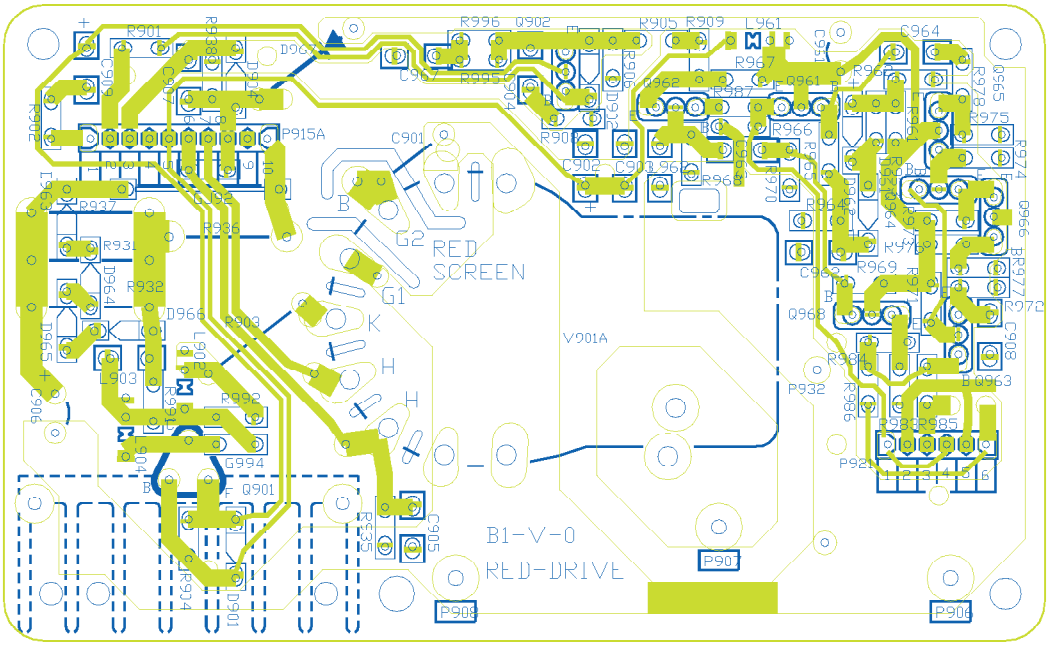

CRT/D-GRN BOARD PB9586ZA-2

BOTTOM (FOIL) SIDE

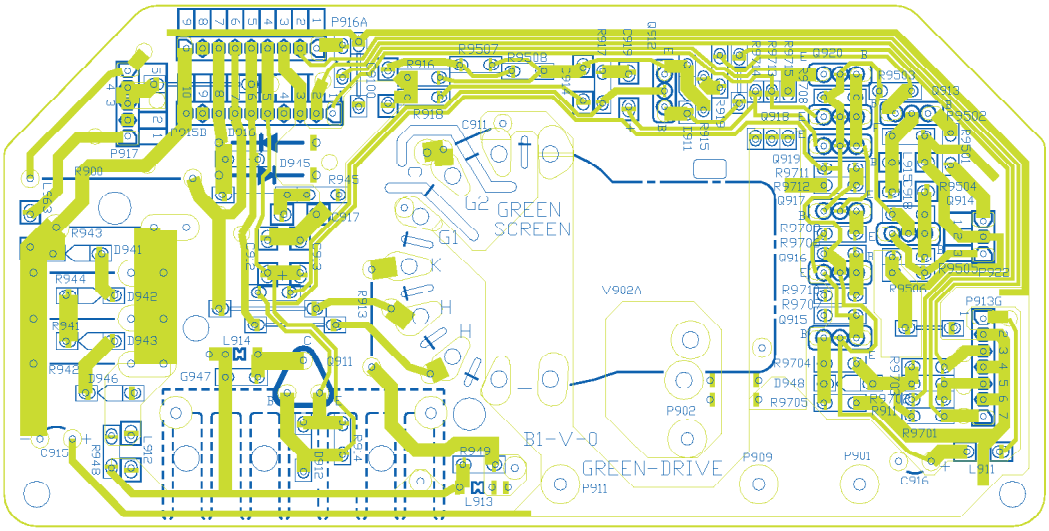

CRT/D-BLU BOARD PB9586ZA-3

BOTTOM (FOIL) SIDE

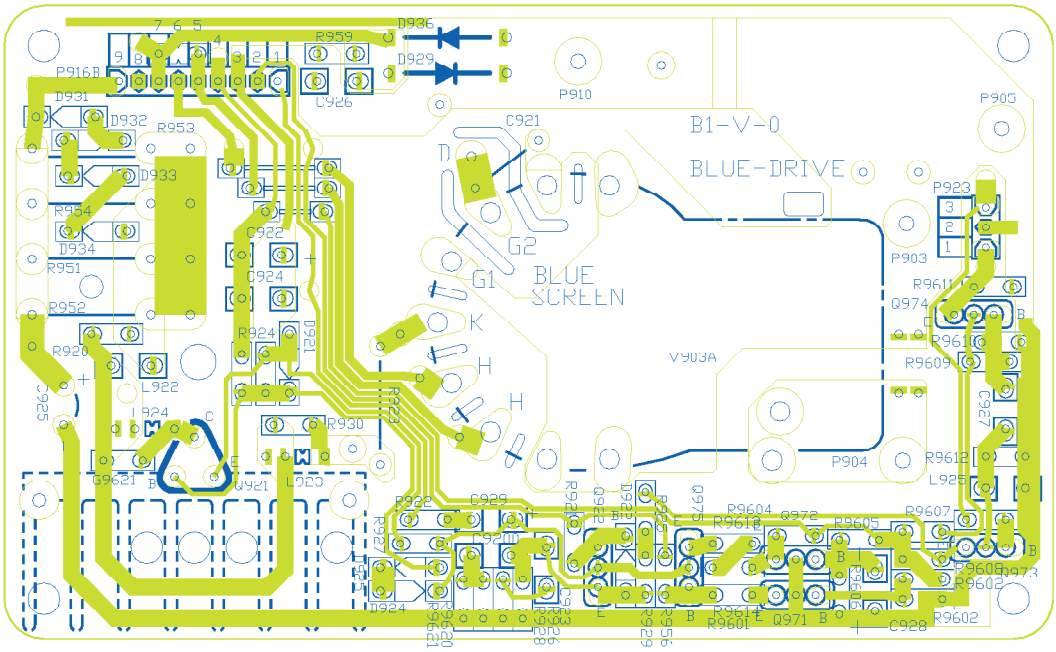

D-COVER BOARD PB9585F

BOTTOM (FOIL) SIDE

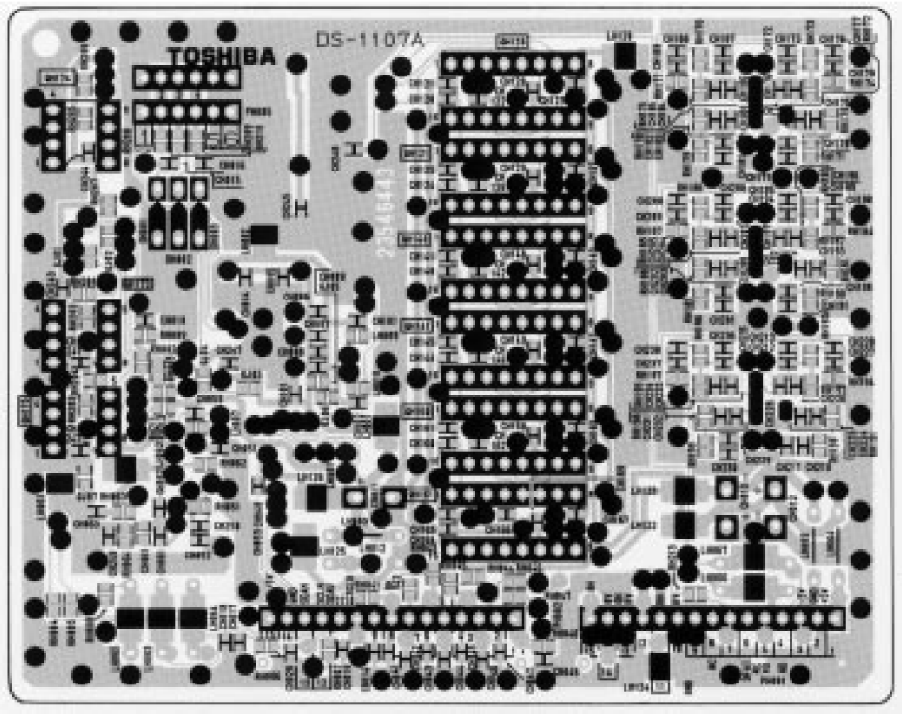

SVM-R BOARD PB9586ZA-4

BOTTOM (FOIL) SIDE

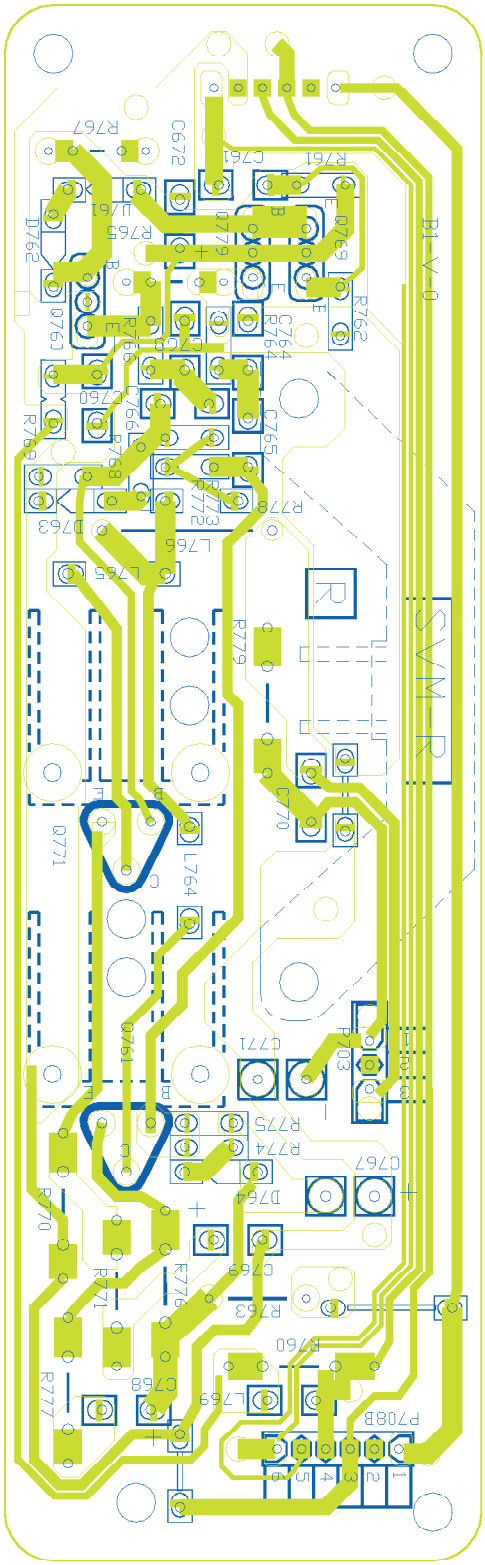

SVM-G BOARD PB9586ZA-5

BOTTOM (FOIL) SIDE

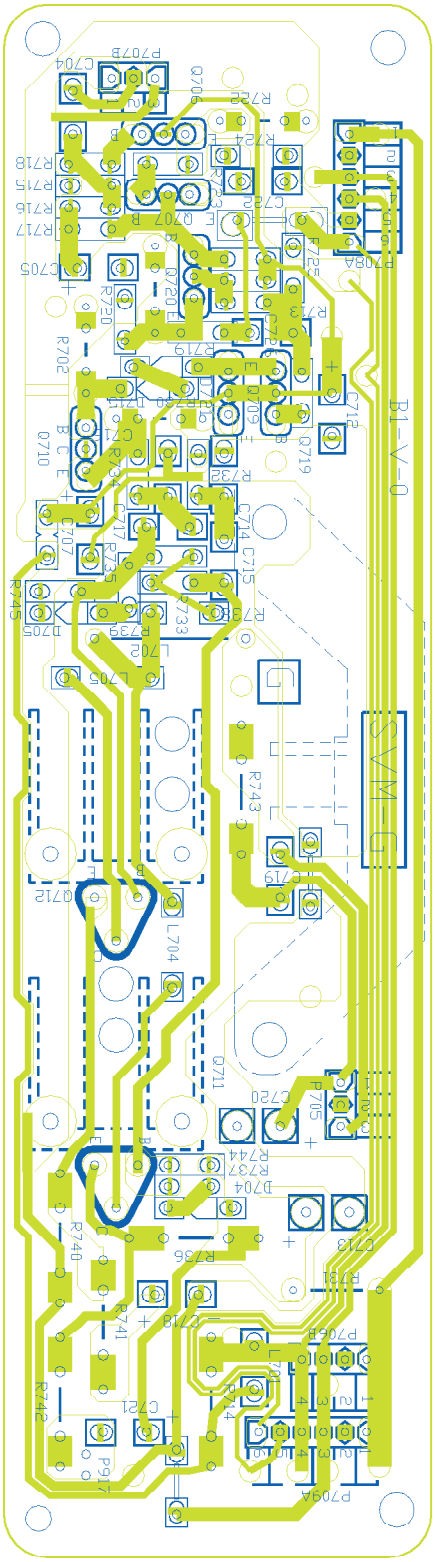

SVM-B BOARD PB9586ZA-6

BOTTOM (FOIL) SIDE

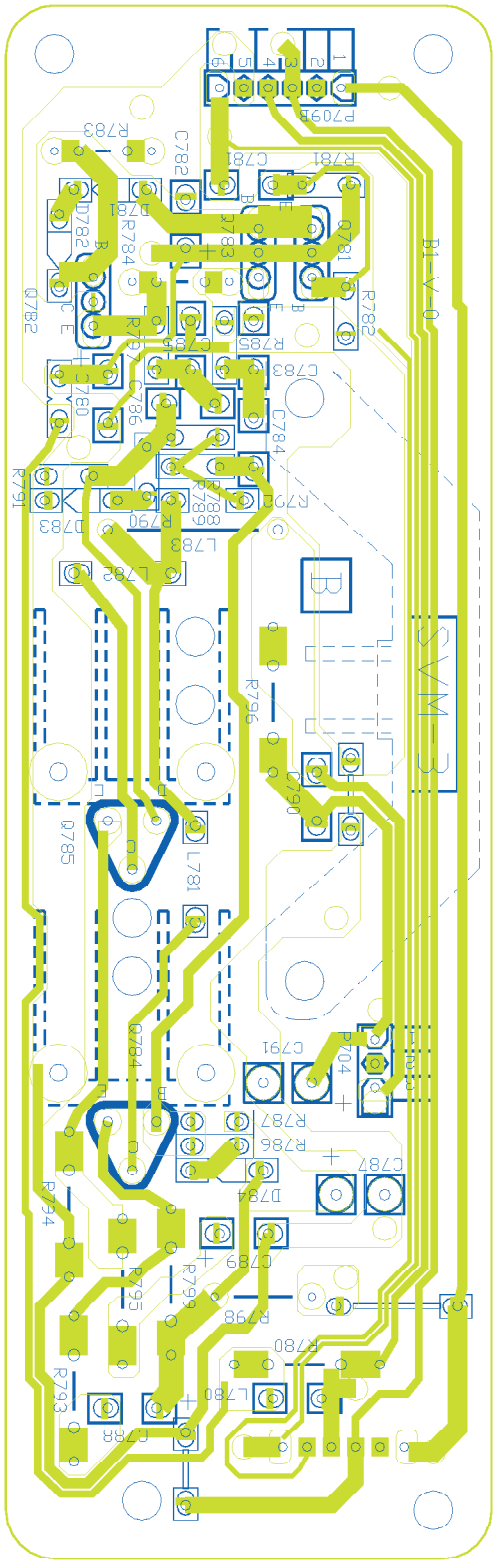

SRS BOARD PB9587

BOTTOM (FOIL) SIDE

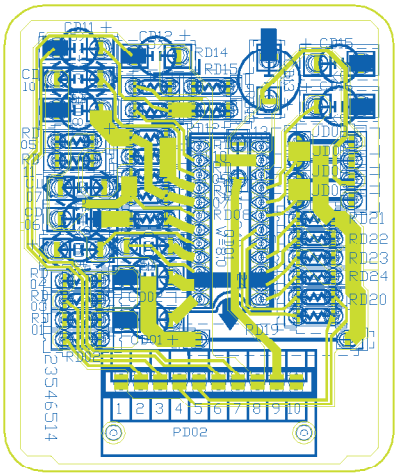

FRONT BOARD PB9121B (56H80)

BOTTOM (FOIL) SIDE

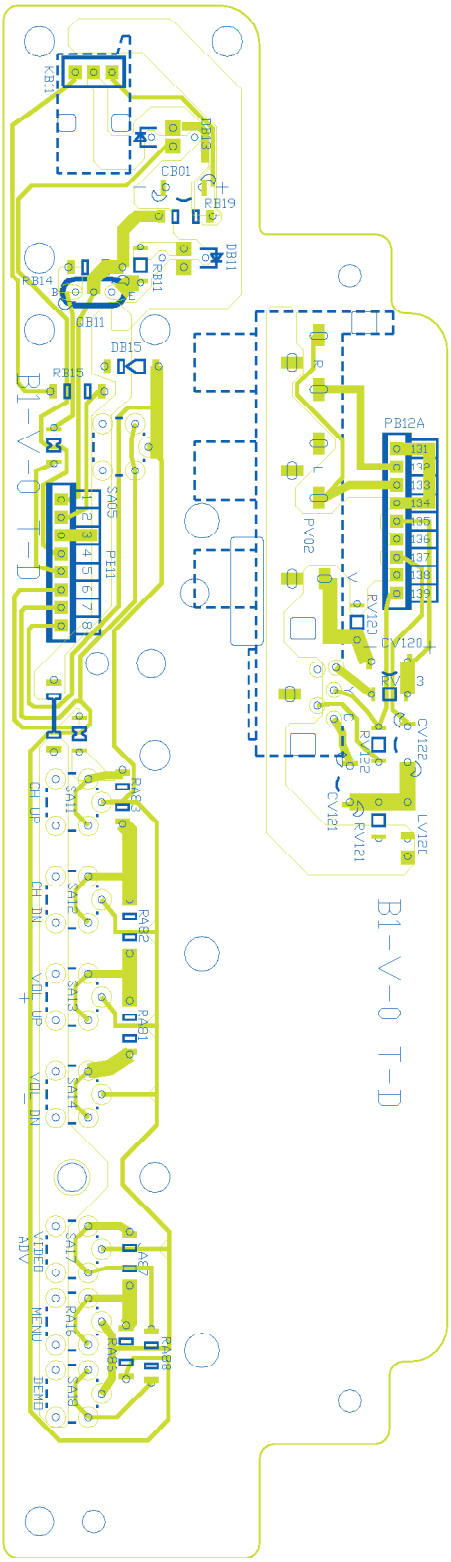

FRONT BOARD PB9652 (40H80)

BOTTOM (FOIL) SIDE

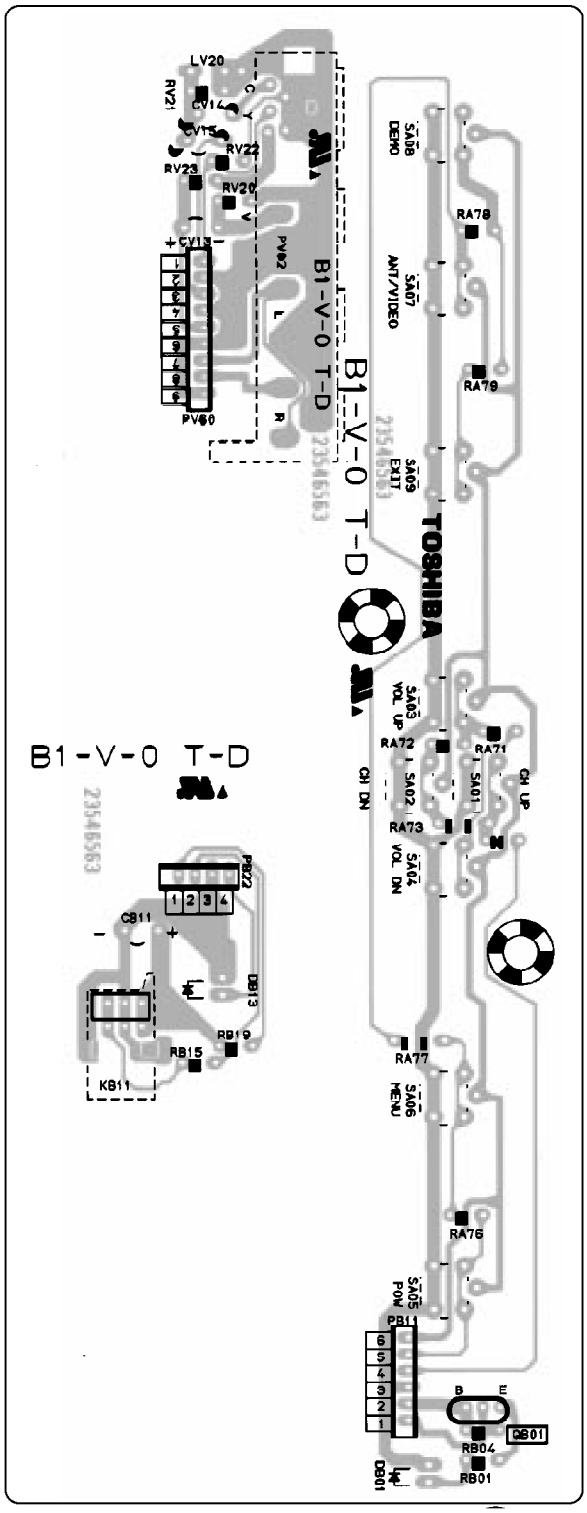

TERMINAL VIEW OF TRANSISTORS

① 2SC5144

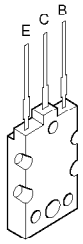

② 2SC3852
2SD1763A
2SC1569
2SC4544
2SA1788
2SA1306
2SA1186A

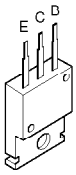

③ 2SC752GTM
2SC2482
2SC2655
2SC4721P

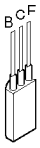

④ 2SC752
2SA562TM
2SA1015
2SC1815
2SC2878
2SC1740S
2SC2120
2SA9335

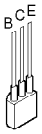

⑤ 2SA1788

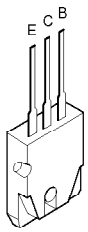

⑥ RN2203
RN2201
RN2004
RN1203
RN1204
RN2204
RN1205
RN1202
RN1201

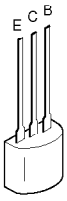

⑦ 2SD1554
2SD2253
2SD1556
2SD2553
2SC5143

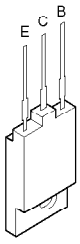

⑧ ON4409

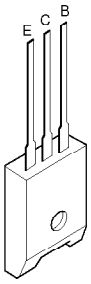

MEMO

MEMO

SPECIFICATIONS (Representative: 56H80)

TELEVISION SYSTEM	NTSC standard
CHANNEL COVERAGE	VHF: 2 through 13 UHF: 14 through 69 Cable TV: Mid band (A-8 through A-1, A through I) Super band (J through W) Hyper band (AA through ZZ, AAA, BBB) Ultra band (65 through 94, 100 through 125)
POWER SOURCE	120 V AC, 60 Hz
POWER CONSUMPTION	195W (Average)
AUDIO POWER	14 W + 14 W
SPEAKER TYPE	Two 6-5/16 inches (16 cm) round
VIDEO/AUDIO TERMINALS	S-VIDEO INPUT Y-INPUT: 1V (p-p), 75 ohm, negative sync. C-INPUT: 0.286 V(p-p) (burst signal), 75 ohm VIDEO/AUDIO INPUT VIDEO: 1 V(p-p), 75 ohm, negative sync. AUDIO: 150 mV(rms) (30% modulation equivalent, 47 kohm) ColorStream™ (Component video) INPUT Y-INPUT: 1 V(p-p), 75 ohm P_R-INPUT: 0.7 V(p-p), 75 ohm P_B-INPUT: 0.7 V(p-p), 75 ohm AUDIO: 150mV(rms). 47 kohm VIDEO/AUDIO OUTPUT VIDEO: 1 V(p-p), 75 ohm, negative sync. AUDIO: 150 mV(rms) (30% modulation equivalent, 4.7 kohm) VARIABLE AUDIO OUTPUT 0-300 mV(rms) (30% modulation equivalent, 4.7 kohm) AUDIO CENTER CHANNEL INPUT 300 mV(rms) (30% modulation equivalent, 10 kohm)
DIMENSIONS/MASS	

	Dimension (W/H/D)	Mass
56H80	52 x 53-15/16 x 26-3/8 inches (1,321 x 1,370 x 670 mm)	320 lbs (145.3 kg)

SUPPLIED ACCESSORIES	Remote Control with 2 size "AA" alkaline batteries

*Please refer to owner's manual in detail.

SCHEMATIC DIAGRAM

MODEL : 56H80 **Chassis No. TAC0072**
40H80 **Chassis No. TAC0073**

WARNING: BEFORE SERVICING THIS CHASSIS, READ THE "X-RAY RADIATION PRECAUTION", "SAFETY PRECAUTION" AND "PRODUCT SAFETY NOTICE" ON THE MANUAL FOR THIS MODEL.

CAUTION: The international hazard symbols "⚠" in the schematic diagram and the parts list designate components which have special characteristics important for safety and should be replaced only with types identical to those in the original circuit or specified in the parts list. The mounting position of replacements is to be identical with originals. Before replacing any of these components, read carefully the PRODUCT SAFETY NOTICE on the MANUAL for this model. Do not degrade the safety of the receiver through improper servicing.

NOTE:

1. RESISTOR Resistance is shown in ohm [K = 1.000, M = 1.000.000]. All resistors are 1/6W and 5% tolerance carbon resistor, unless otherwise noted as the following marks.
   1/2R = Metal or Metal oxide of 1/2 watt 1/2S = Carbon compsistion of 1/2 watt
   1RF = Fuse resistor of 1 watt 10W = Cement of 10 watt
   K = +10% G = +2% F = +1%
2. CAPACITOR Unless otherwise noted in schematic, all capacitor values less than 1 are expressed in μF, and the values more than 1 in pF.
   All capacitors are ceramic 50V, unless otherwise noted as the following marks.
   —+||— Electolytic capacitor —M||— Mylar capacitor
3. The parts indicated with " ⚠ " have special characteristics, and should be replaced with identical parts only.
4. Voltages read with DIGITAL MULTI-METER from point indicated to chassing ground, using a color bar signal with all controls at normal, line voltage 120 volts.
5. Waveforms are taken receiving color bar signal with enough sensitivity.
6. Voltage reading shown are nominal values and may vary ±20% except I.I.V.

SCHEMATIC DIAGRAM **MODEL : 56H80** Chassis No. TAC0072
40H80 Chassis No. TAC0073

WARNING BEFORE SERVICING THIS CHASSIS, READ THE "X-RAY RADIATION PRECAUTION", "SAFETY PRECAUTION" AND "PRODUCT SAFETY NOTICE" ON THE MANUAL FOR THIS MODEL.

CAUTION The international hazard symbols "⚠" in the schematic diagram and the parts list designate components which have special characteristics important for safety and should be replaced only with types identical to those in the original circuit or specified in the parts list. The mounting position of replacements is to be identical with originals. Before replacing any of these components, read carefully the PRODUCT SAFETY NOTICE on the MANUAL for this model. Do not degrade the safety of the receiver through improper servicing.

NOTE:

1. RESISTOR: Resistance is shown in ohm [K = 1,000, M = 1,000,000]. All resistors are 1/6W and 5% tolerance carbon resistor, unless otherwise noted as the following marks.
   1/2R = Metal or Metal oxide of 1/2 watt; 1/2S = Carbon compositION of 1/2 watt
   1RF = Fuse resistor of 1 watt; 10W = Cement of 10 watt
   K = ±10% G = ±2% F = ±1%
2. CAPACITOR: Unless otherwise noted in schematic, all capacitor values less than 1 are expressed in μF, and the values more than 1 in pF.
   All capacitors are ceramic 50V, unless otherwise noted as the following marks.
   Electolytic capacitor Mylar capacitor
3. The parts indicated with " ⚠ " have special characteristics, and should be replaced with identical parts only.
4. Voltages read with DIGITAL MULTI-METER from point indicated to chassing ground, using a color bar signal with all controls at normal line voltage 120 volts.
5. Waveforms are taken receiving color bar signal with enough sensitivity.
6. Voltage reading shown are nominal values and may vary ±20% except H.V.

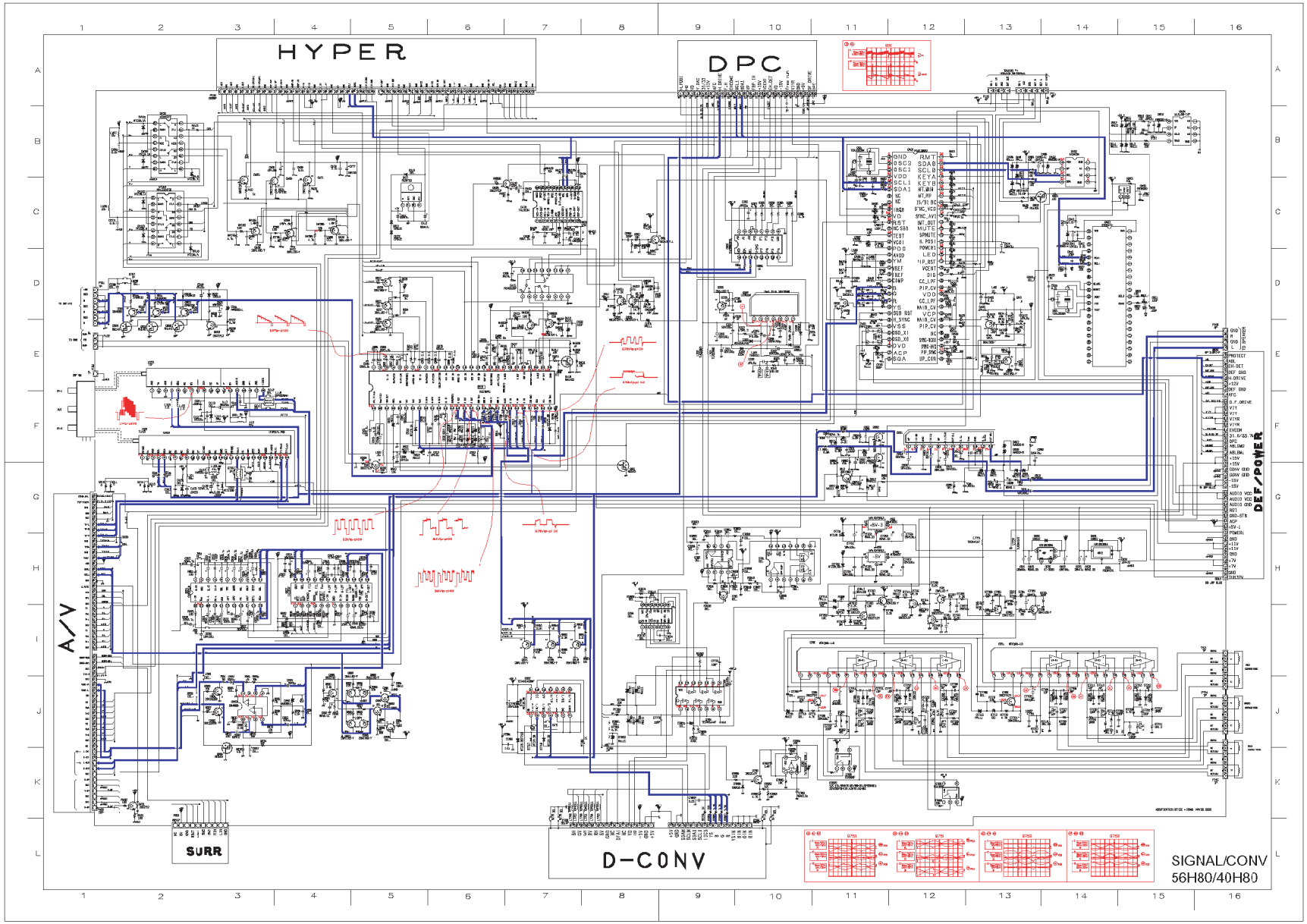

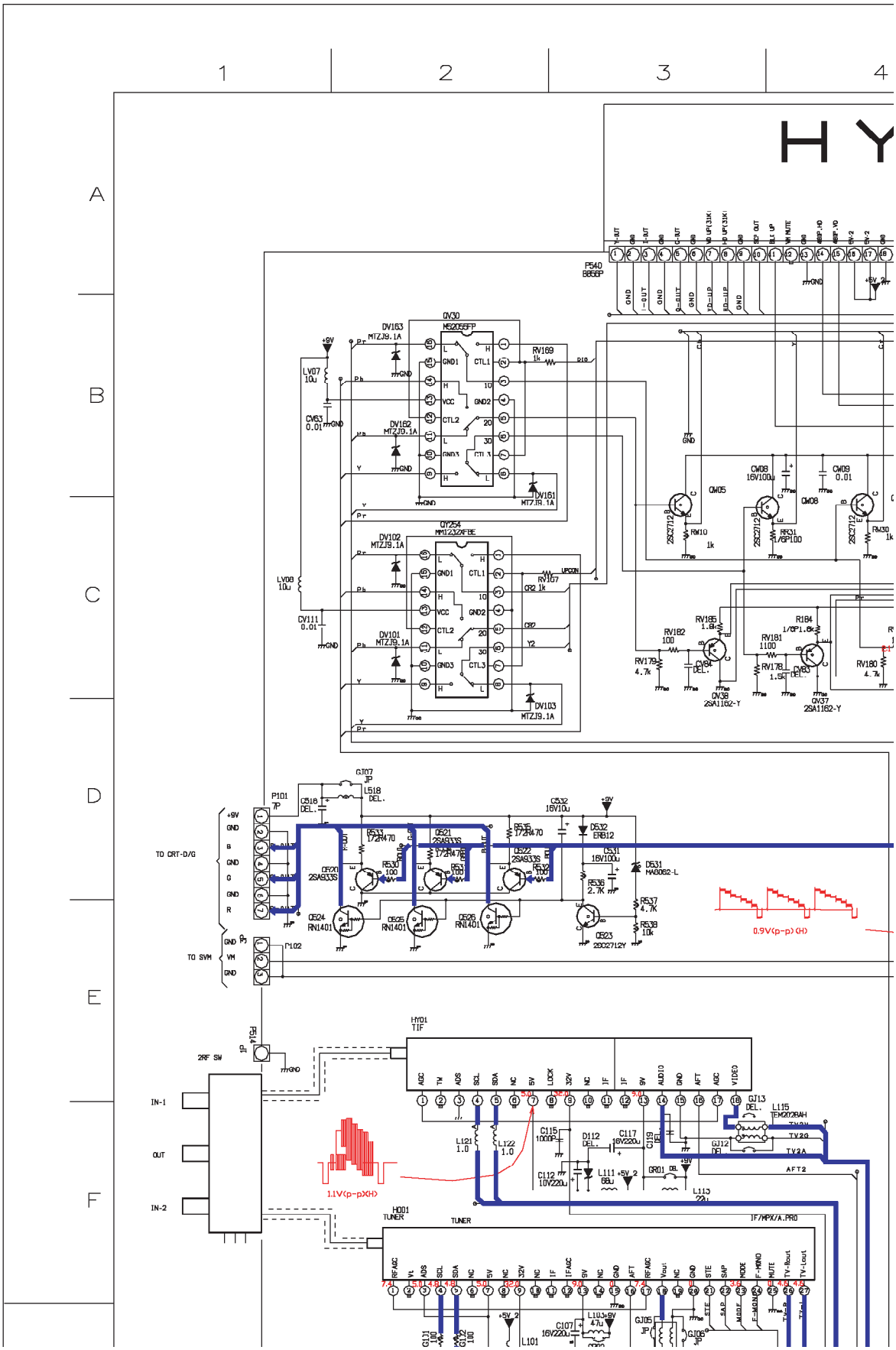

1
2
3
4
A
B
C
D
E
F
HY
P540
B856P
QV30
MS2055FP
QV254
MM1232XFBE
DV163
MTZJ9.1A
DV162
MTZJ9.1A
DV161
MTZJ9.1A
DV102
MTZJ9.1A
DV101
MTZJ9.1A
DV103
MTZJ9.1A
RV169
1k
RV167
1k
LV07
10u
CV63
0.01
LV08
10u
CV111
0.01
QW05
QW08
CW08
16V100u
CW09
0.01
RW10
1k
RW30
1k
RV182
100
RV179
4.7k
RV185
1.8k
RV181
1100
RV178
1.5k
RV180
4.7k
CV84
DEL.
CV83
DEL.
QV38
2SA1162-Y
QV37
2SA1162-Y
GJ07
JP
L518
DEL.
P101
7P
C518
DEL.
C532
16V10u
D532
ERB12
R533
172R470
R535
172R470
Q521
2SA933S
Q522
2SA933S
Q520
2SA933S
R530
100
R531
100
R532
100
C531
16V100u
D531
MA8062-L
R536
2.7K
R537
4.7K
R538
10k
Q524
RN1401
Q525
RN1401
Q526
RN1401
Q523
2SC2712Y
TO CRT-D/G
TO SVM
P102
0.9V(p-p)(H)
HY01
TIF
2RF SW
P514
IN-1
OUT
IN-2
L121
1.0
L122
1.0
C115
1000P
D112
DEL.
C117
16V220u
C119
C112
10V220u
L111
68u
GR01
L113
22u
GJ13
DEL.
L115
TEM2028AH
GJ12
DEL.
TV2G
TV2A
AFT2
1.1V(p-p)(H)
H001
TUNER
IF/MPX/A.PRO
C107
16V220u
L101
GJ05
JP
GJ06
JP

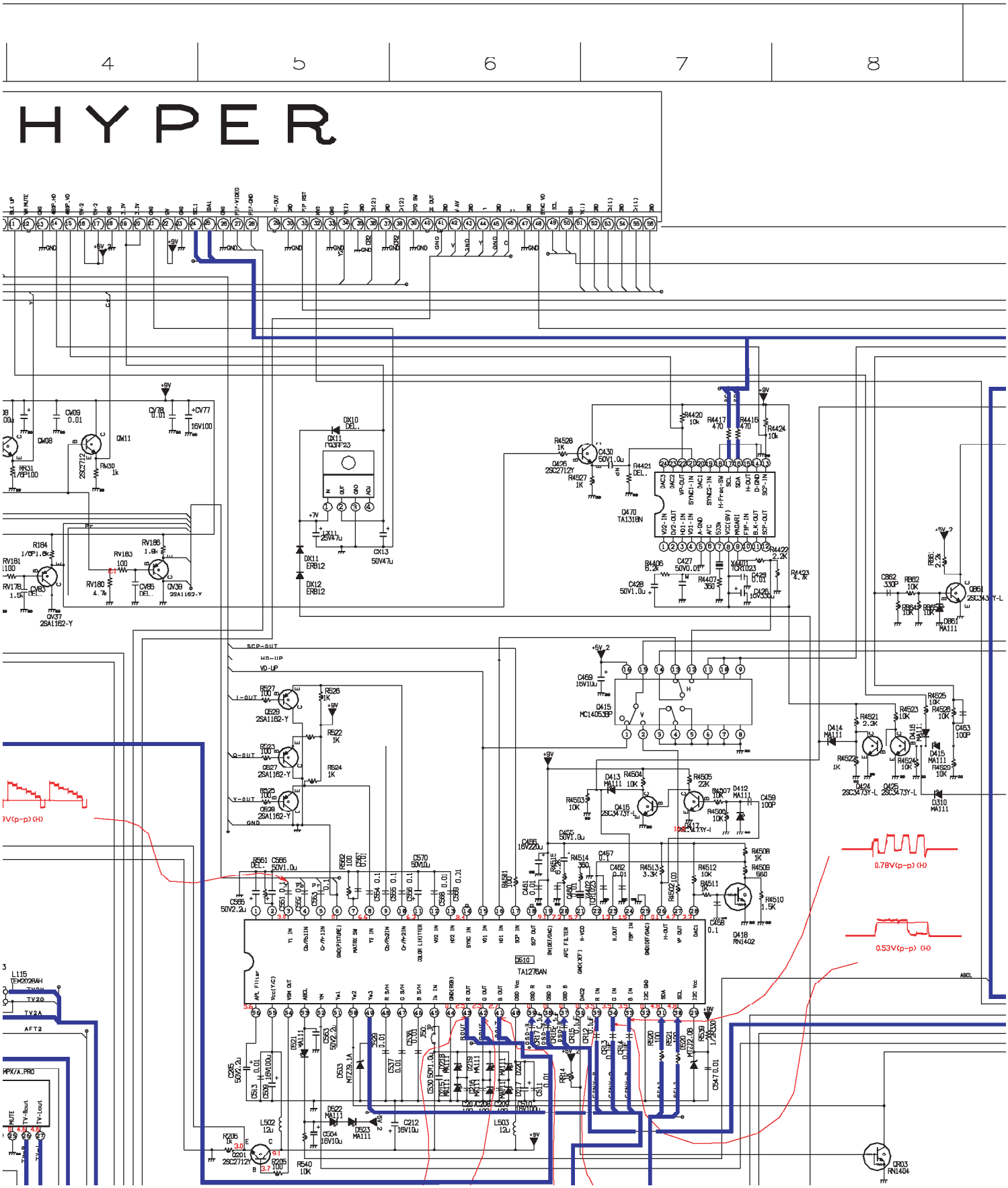
4
5
6
7
8
HYPER
Q470
TA1318N
Q415
MC14053BP
Q418
RN1402
Q510
TA1276AN
0.78V(p-p) (H)
0.53V(p-p) (H)

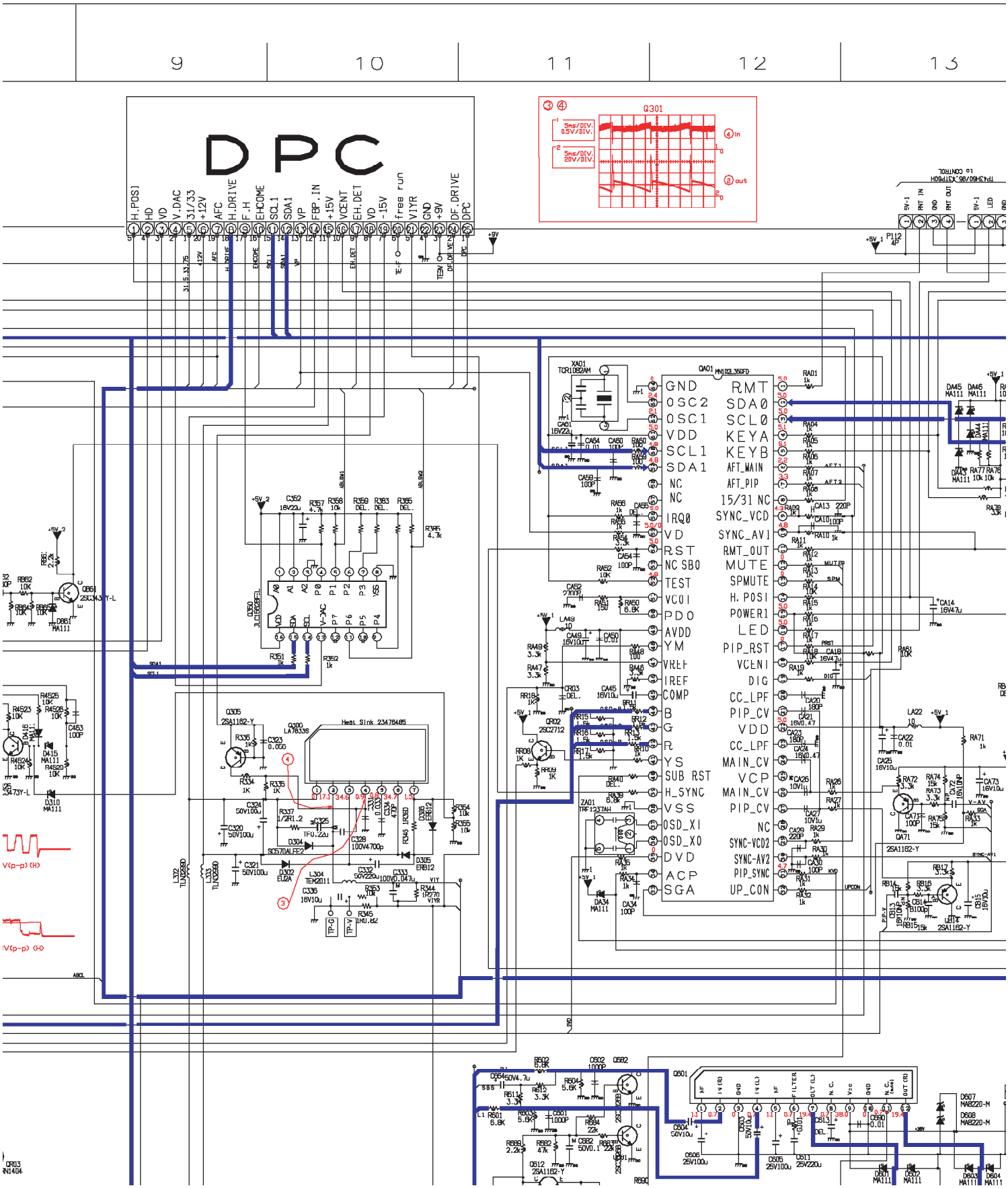
9
10
11
12
13
DPC
H.POSI
HD
VD
V.DAC
31/33
+12V
AFC
H.DRIVE
F.H
EHCOME
SCL1
SDA1
VP
FBP.IN
+15V
VCENT
EH.DET
VD
-15V
free run
VIYR
GND
+9V
DF.DRIVE
DPC
Q301
5ms/DIV.
0.5V/DIV.
5ms/DIV.
20V/DIV.
in
out
GND
OSC2
OSC1
VDD
SCL1
SDA1
NC
NC
IRQ0
VD
RST
NC SBO
TEST
VCOI
PDO
AVDD
YM
VREF
IREF
COMP
B
G
R
YS
SUB RST
H_SYNC
VSS
OSD_XI
OSD_XO
DVD
ACP
SGA
RMT
SDA0
SCL0
KEYA
KEYB
AFT_MAIN
AFT_PIP
15/31 NC
SYNC_VCD
SYNC_AV1
RMT_OUT
MUTE
SPMUTE
H. POSI
POWER1
LED
PIP_RST
VCENI
DIG
CC_LPF
PIP_CV
VDD
CC_LPF
MAIN_CV
VCP
MAIN_CV
PIP_CV
NC
SYNC-VCD2
SYNC-AV2
PIP_SYNC
UP_CON
Heat Sink 23476495
Q301
Q601

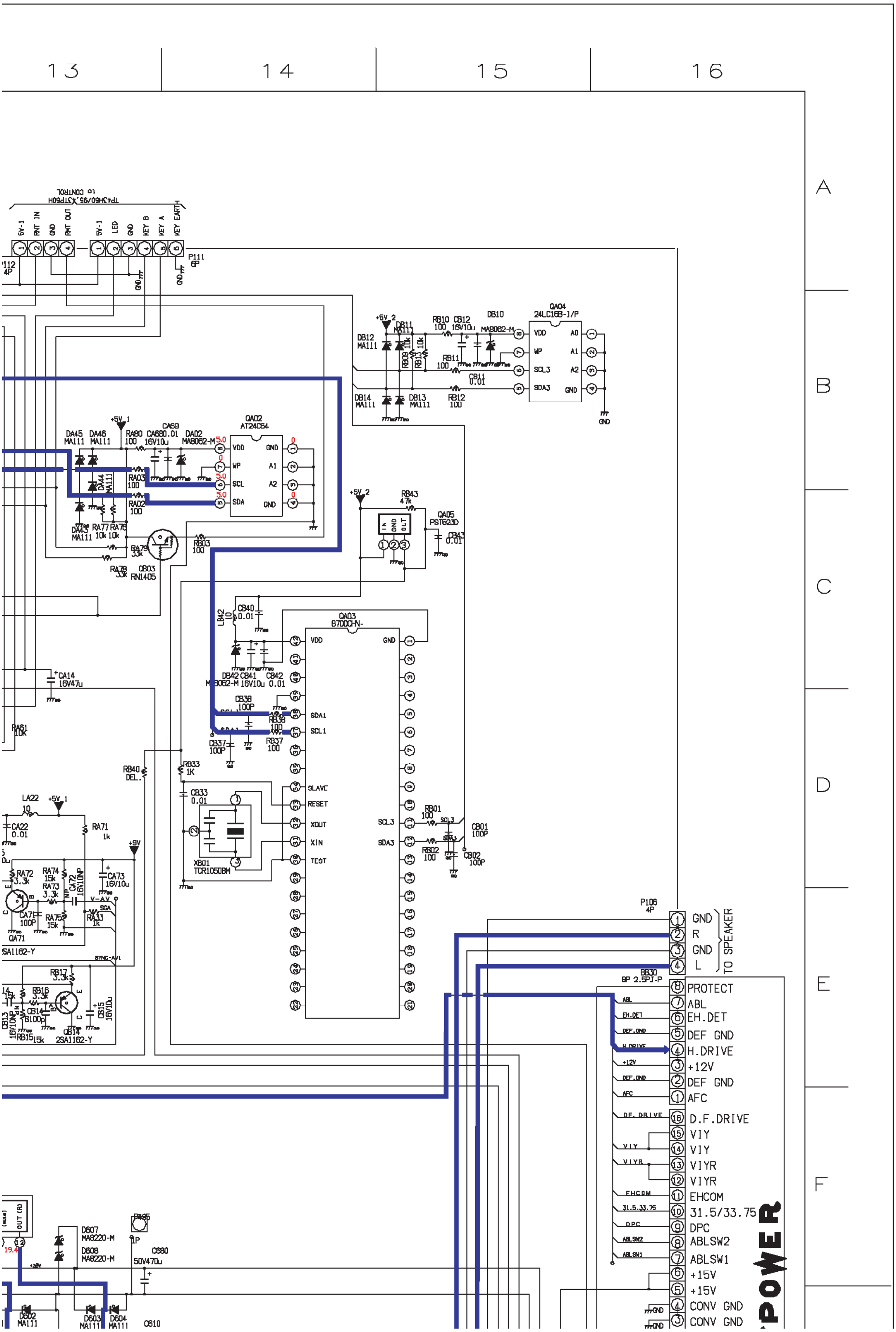

13
14
15
16
A
B
C
D
E
F
to CONTROL
TP43H60/95,43TP60H
P111 6P
P112 4P
QA02 AT24C64
QA03 B700CHN-
QA04 24LC16B-1/P
QA05 PST523D
XB01 TCR1050BM
P106 4P
GND
R
GND
L
TO SPEAKER
BB30 8P 2.5PJ-P
PROTECT
ABL
EH.DET
DEF GND
H.DRIVE
+12V
DEF GND
AFC
D.F.DRIVE
VIY
VIY
VIYR
VIYR
EHCOM
31.5/33.75
DPC
ABLSW2
ABLSW1
+15V
+15V
CONV GND
CONV GND
POWER

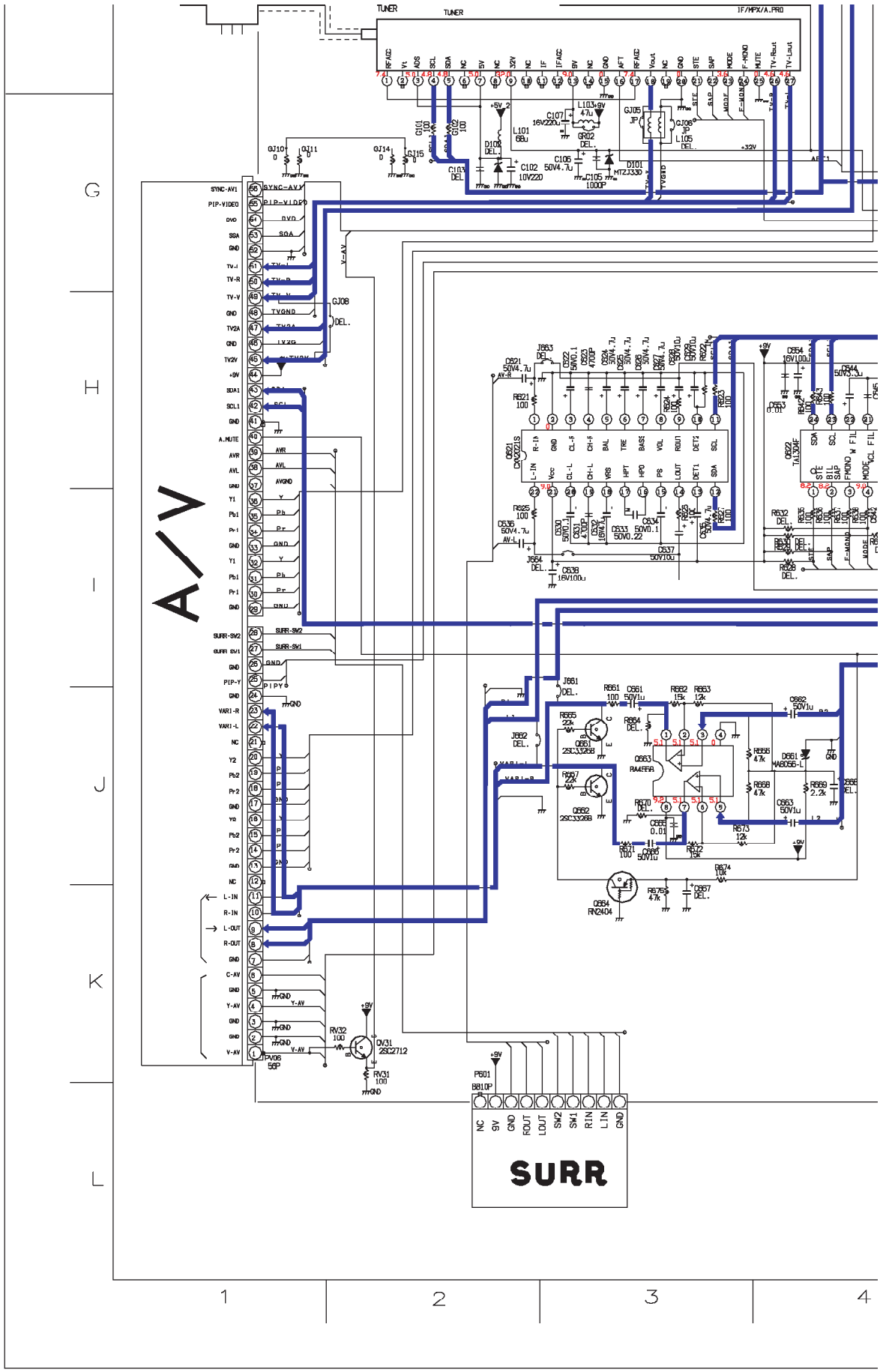
TUNER
IF/MPX/A.PRO
A/V
SURR
G
H
I
J
K
L
1
2
3
4

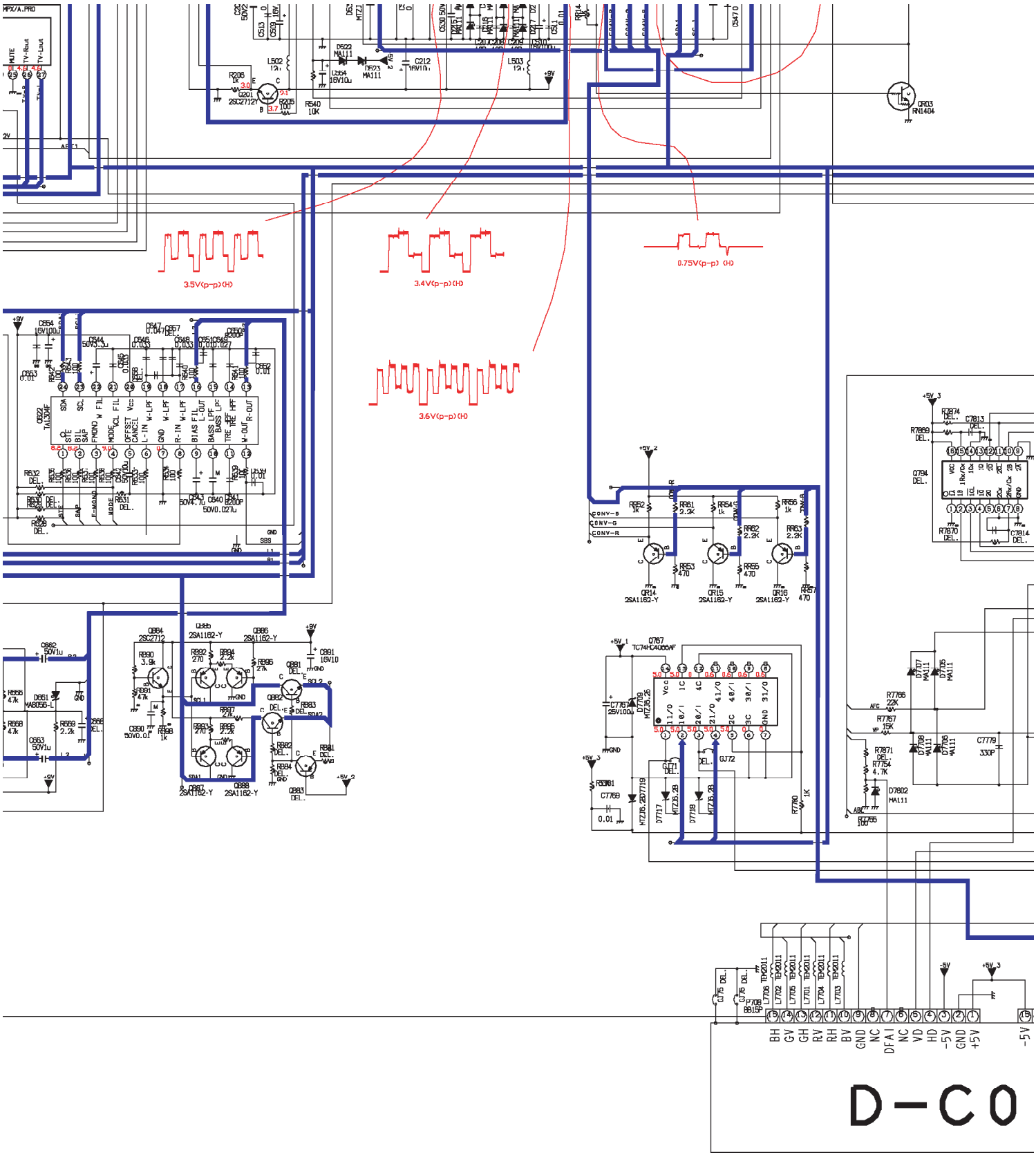
3.5V(p-p)(H)
3.4V(p-p)(H)
0.75V(p-p) (H)
3.6V(p-p)(H)
BH
GV
GH
RV
RH
BV
GND
NC
DFAI
NC
VD
HD
-5V
GND
+5V
-5V
D-C0

4	5	6	7	8

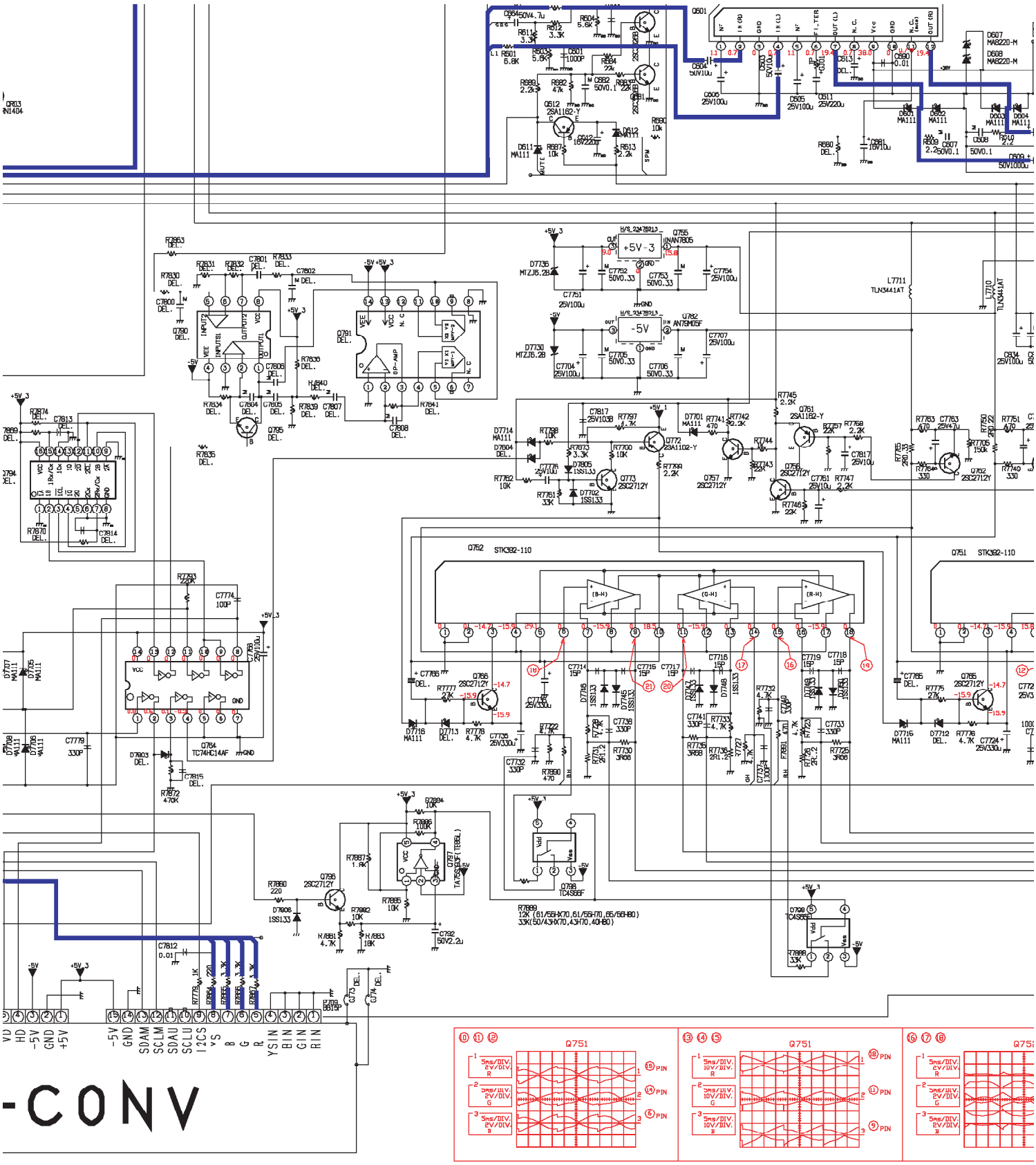

-CONV
Q751
Q752 STK392-110
Q751 STK392-110
Q764 TC74HC14AF
Q798 TC4S66F
Q755 AN7805
Q782 AN79M05F
+5V-3
-5V
L7711 TLN3441AT
L7710 TLN3441AT
R7899 12K (61/55HX70,61/55H70,65/56H80) 33K(50/43HX70,43H70,40H80)
VD HD -5V GND +5V
-5V GND SDAM SCLM SDAU SCLU I2CS VS B G R YSIN BIN GIN RIN
9
10
11
12
13

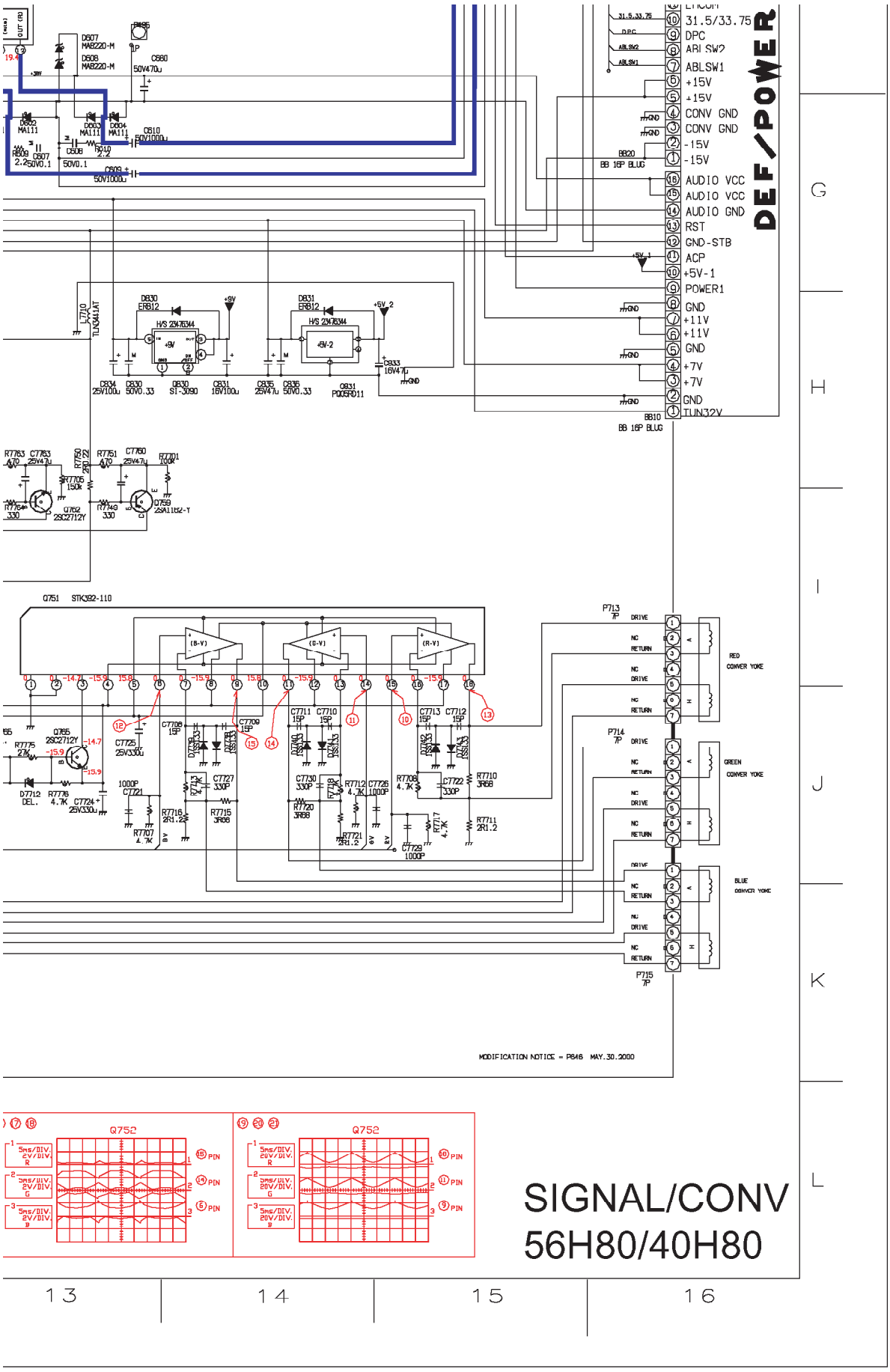
DEF/POWER
31.5/33.75
DPC
ABL SW2
ABLSW1
+15V
+15V
CONV GND
CONV GND
-15V
-15V
AUDIO VCC
AUDIO VCC
AUDIO GND
RST
GND-STB
ACP
+5V-1
POWER1
GND
+11V
+11V
GND
+7V
+7V
GND
TUN32V
BB20
BB 16P BLUG
BB10
BB 16P BLUG
Q751 STK392-110
P713 7P
P714 7P
P715 7P
RED CONVER YOKE
GREEN CONVER YOKE
BLUE CONVER YOKE
MODIFICATION NOTICE = P846 MAY.30.2000
Q752
SIGNAL/CONV
56H80/40H80

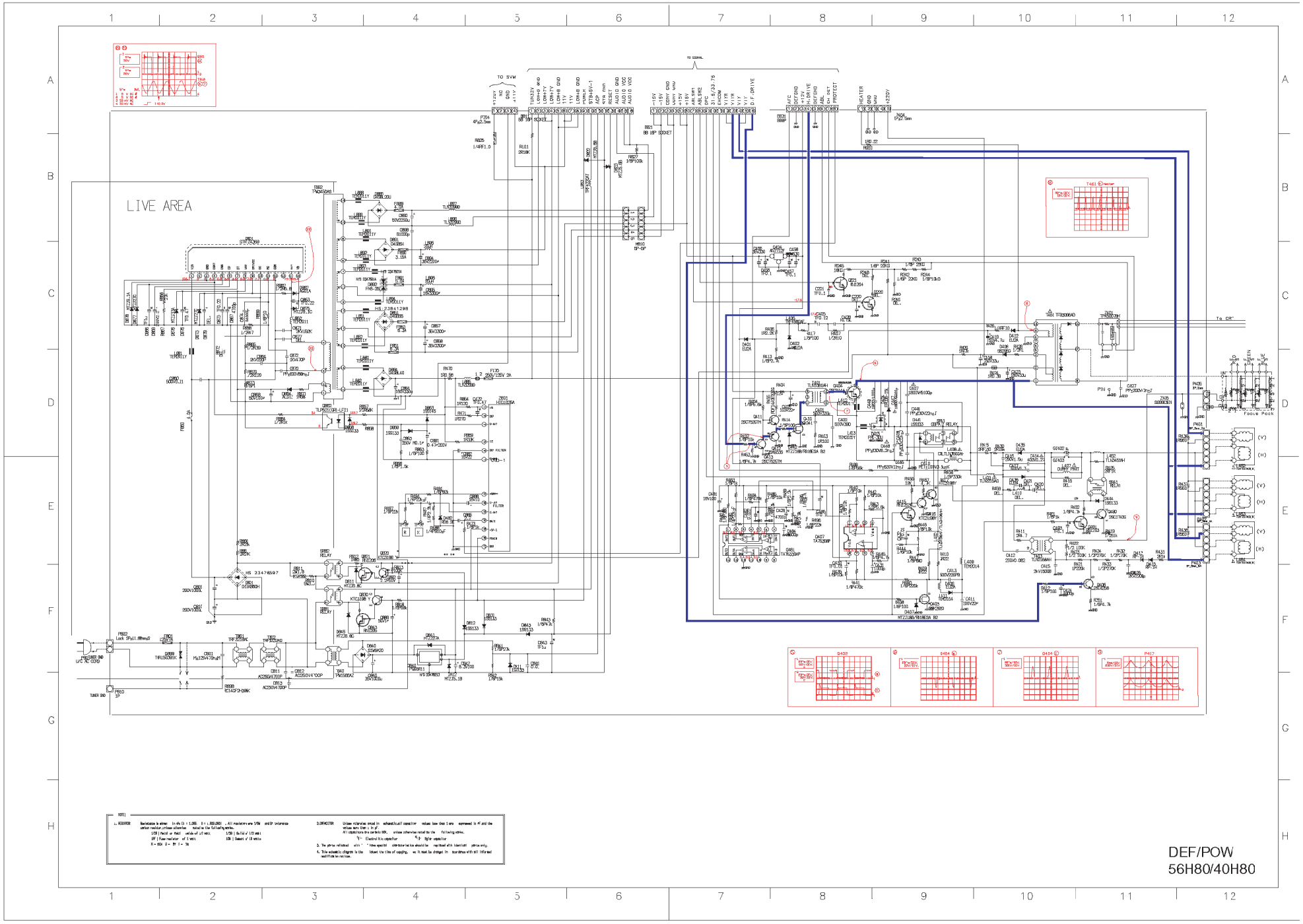
LIVE AREA
TO SVM
TO SIGNAL
To CR
Focus Pack
DEF/POW
56H80/40H80

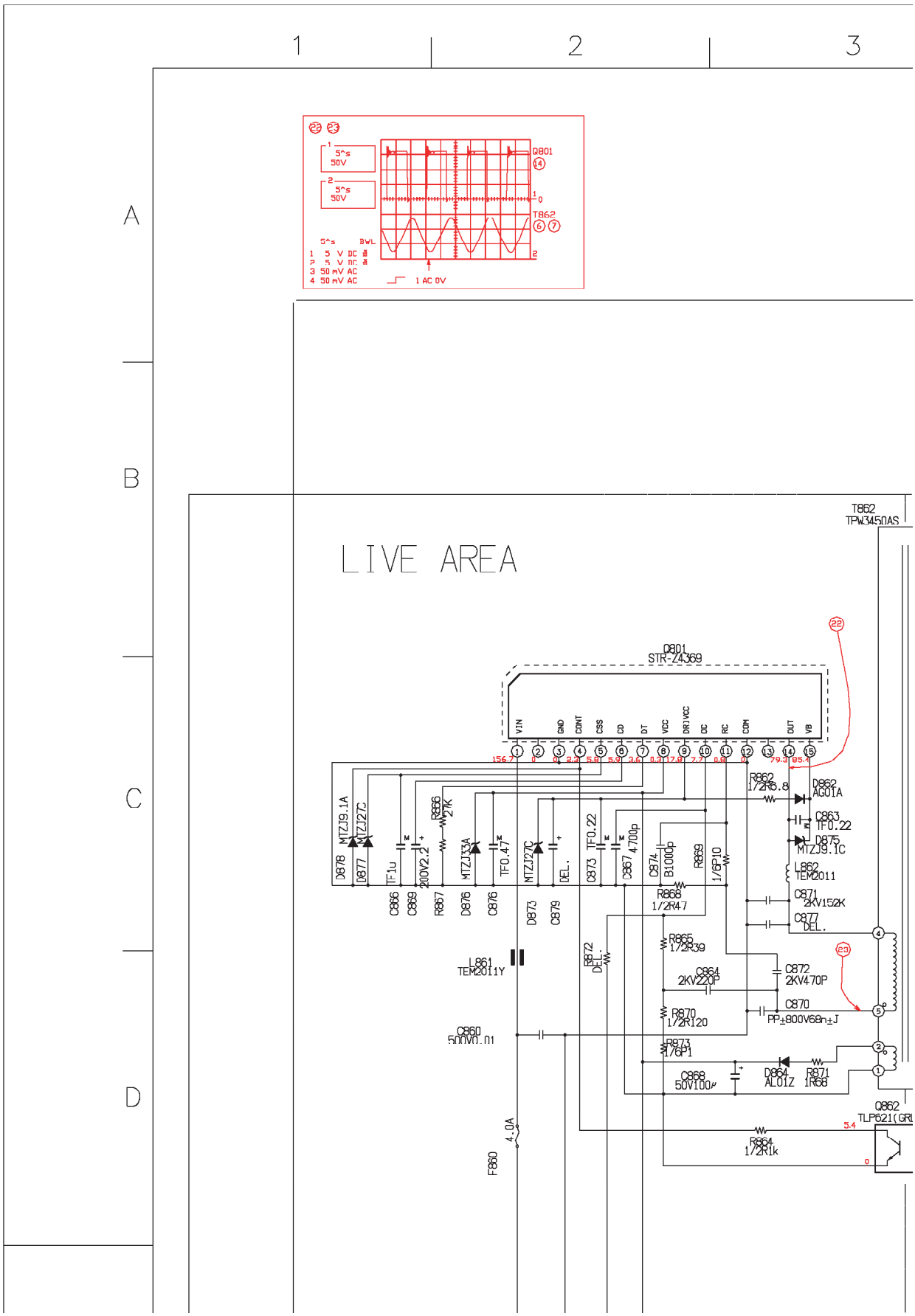
1
2
3
A
B
C
D
LIVE AREA
T862
TPW3450AS
Q801
STR-Z4369
VIN
GND
CONT
CSS
CD
DT
VCC
DRIVCC
DC
RC
COM
OUT
VB
D878
MTZJ9.1A
D877
MTZJ27C
C866
TF1u
C869
200V2.2
R867
R866
27K
D876
MTZJ33A
C876
TF0.47
D873
MTZJ27C
C879
DEL.
C873
TF0.22
C867
4700p
C874
B1000p
R869
1/6P10
R868
1/2R47
R862
1/2R6.8
D862
AC01A
C863
TF0.22
D875
MTZJ9.1C
L862
TEM2011
C871
2KV152K
C877
DEL.
R865
1/2R39
C864
2KV220P
C872
2KV470P
C870
PP±800V68n±J
R870
1/2R120
R873
1/6P1
C868
50V100μ
D864
AL01Z
R871
1R68
Q862
TLP621(GR
R864
1/2R1k
L861
TEM2011Y
R872
DEL.
C860
500V0.01
F860
4.0A
22
23

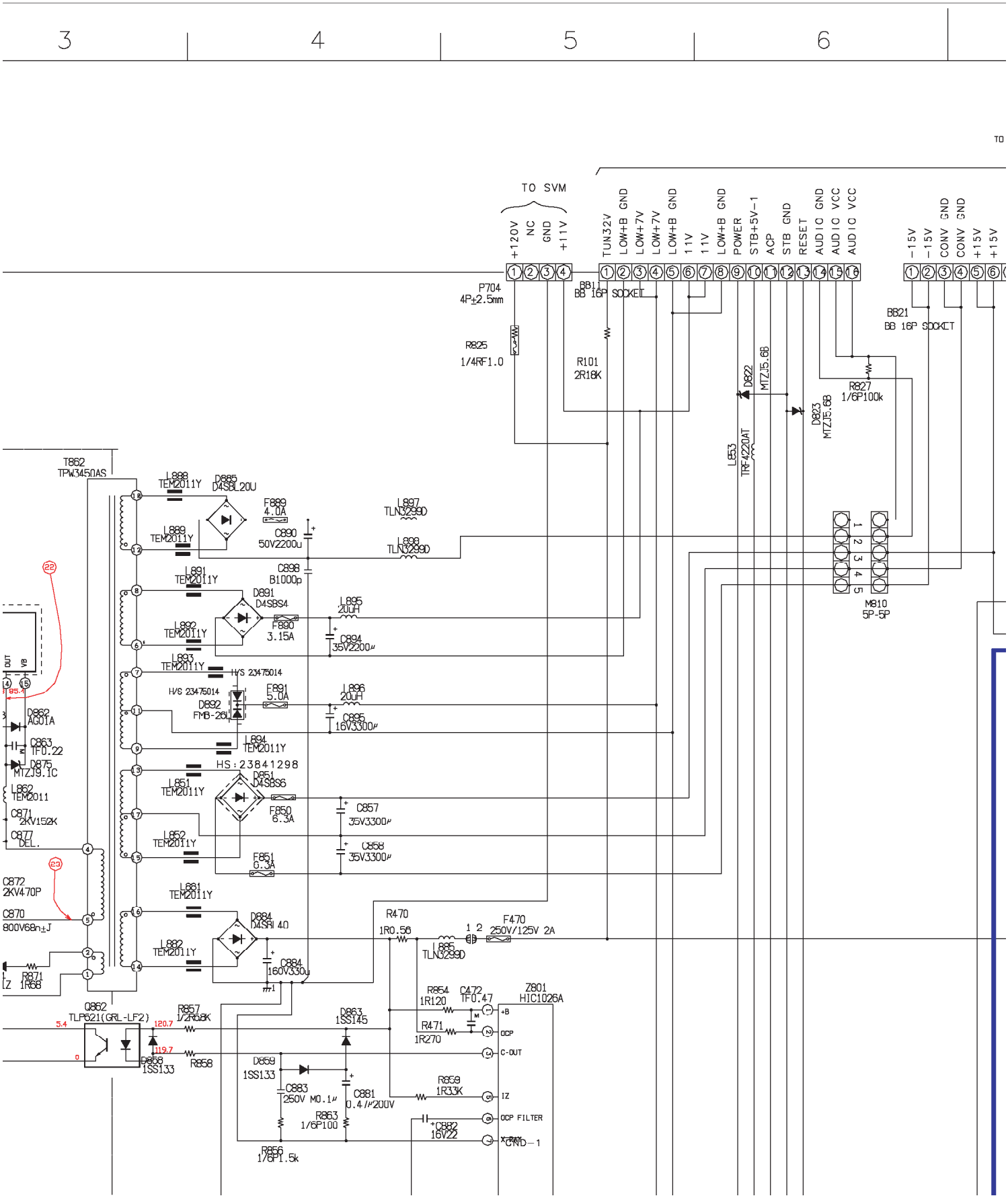
3
4
5
6
TO SVM
+120V
NC
GND
+11V
TUN32V
LOW+B GND
LOW+7V
LOW+7V
LOW+B GND
11V
11V
LOW+B GND
POWER
STB+5V-1
ACP
STB GND
RESET
AUDIO GND
AUDIO VCC
AUDIO VCC
-15V
-15V
CONV GND
CONV GND
+15V
+15V
P704
4P±2.5mm
BB11
BB 16P SOCKET
BB21
BB 16P SOCKET
R825
1/4RF1.0
R101
2R18K
D822
MTZJ5.6B
D823
MTZJ5.6B
R827
1/6P100k
L853
TRF4220AT
M810
5P-5P
T862
TPW3450AS
L888
TEM2011Y
D885
D4SBL20U
F889
4.0A
L889
TEM2011Y
C890
50V2200u
L897
TLN3299D
L898
TLN3299D
C898
B1000p
L891
TEM2011Y
D891
D4SBS4
L895
20UH
L892
TEM2011Y
F890
3.15A
C894
35V2200μ
L893
TEM2011Y
H/S 23475014
H/S 23475014
D892
FMB-26L
F891
5.0A
L896
20UH
C895
16V3300μ
L894
TEM2011Y
HS:23841298
L851
TEM2011Y
D851
D4SBS6
F850
6.3A
C857
35V3300μ
L852
TEM2011Y
C858
35V3300μ
F851
6.3A
L881
TEM2011Y
D884
D4SRI 40
L882
TEM2011Y
C884
160V330u
R470
1R0.56
F470
250V/125V 2A
L885
TLN3299D
D862
AG01A
C863
TF0.22
D875
MTZJ9.1C
L862
TEM2011
C871
2KV152K
C877
DEL.
C872
2KV470P
C870
800V68n±J
R871
1R68
Q862
TLP621(GRL-LF2)
R857
1/2R68K
D858
1SS133
R858
D863
1SS145
D859
1SS133
C883
250V M0.1μ
C881
0.4/μ200V
R863
1/6P100
R856
1/6P1.5k
R854
1R120
C472
TF0.47
R471
1R270
R859
1R33K
C882
16V22
Z801
HIC1026A
+B
OCP
C-OUT
IZ
OCP FILTER
GND-1

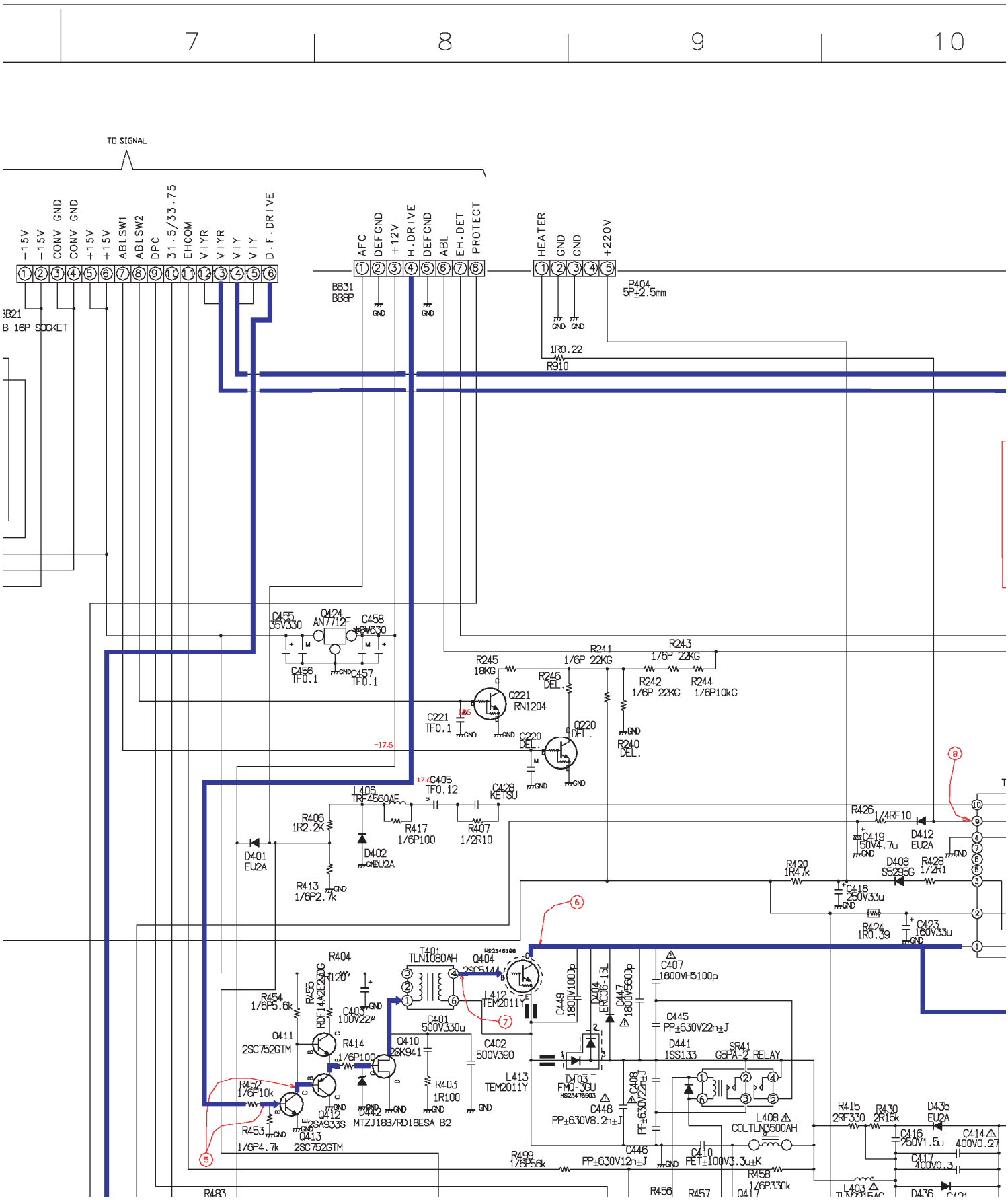
7
8
9
10
TO SIGNAL
-15V
-15V
CONV GND
CONV GND
+15V
+15V
ABLSW1
ABLSW2
DPC
31.5/33.75
EHCOM
VIYR
VIYR
VIY
VIY
D.F.DRIVE
AFC
DEF GND
+12V
H.DRIVE
DEF GND
ABL
EH.DET
PROTECT
HEATER
GND
GND
+220V
BB31
BB8P
P404
5P±2.5mm
BB21
B 16P SOCKET
1R0.22
R910
C455
35V330
Q424
AN7712F
C458
35V330
C456
TF0.1
C457
TF0.1
R245
18KG
R241
1/6P 22KG
R243
1/6P 22KG
R246
DEL.
R242
1/6P 22KG
R244
1/6P10kG
Q221
RN1204
C221
TF0.1
Q220
DEL.
C220
DEL.
R240
DEL.
L406
TR-4560AF
C405
TF0.12
C428
KETSU
R406
1R2.2k
R417
1/6P100
R407
1/2R10
D401
EU2A
D402
EU2A
R413
1/6P2.7k
R426
1/4RF10
C419
50V4.7u
D412
EU2A
D408
S5295G
R428
1/2R1
R420
1R47k
C418
250V33u
R424
1R0.39
C423
160V33u
R404
T401
TLN1080AH
Q404
2SC5144
L412
TEM2011Y
C403
100V22u
R454
1/6P5.6k
R55
RD14AZ2.0G
Q411
2SC752GTM
R414
1/6P100
Q410
2SK941
C401
500V330u
C402
500V390
R403
1R100
L413
TEM2011Y
C449
1800V1000p
D404
ERC06-15L
C447
1800V560p
C407
1800V15100p
C445
PP±630V22n±J
D441
1SS133
SR41
G5PA-2 RELAY
D403
FMD-3GU
C448
PP±630V8.2n±J
C408
PP±630V22n±J
L408
COILTLN3500AH
R452
1/6P10k
Q412
2SA933S
D442
MTZJ18B/RD18ESA B2
R453
1/6P4.7k
Q413
2SC752GTM
R415
2RF330
R430
2R15k
D435
EU2A
C416
250V1.5u
C414
400V0.27
C417
400V0.3
C446
PP±630V12n±J
C410
PET±100V3.3u±K
R458
1/6P330k
R499
1/6P5.6k
R483
R456
R457
Q417
L403
D436
C421

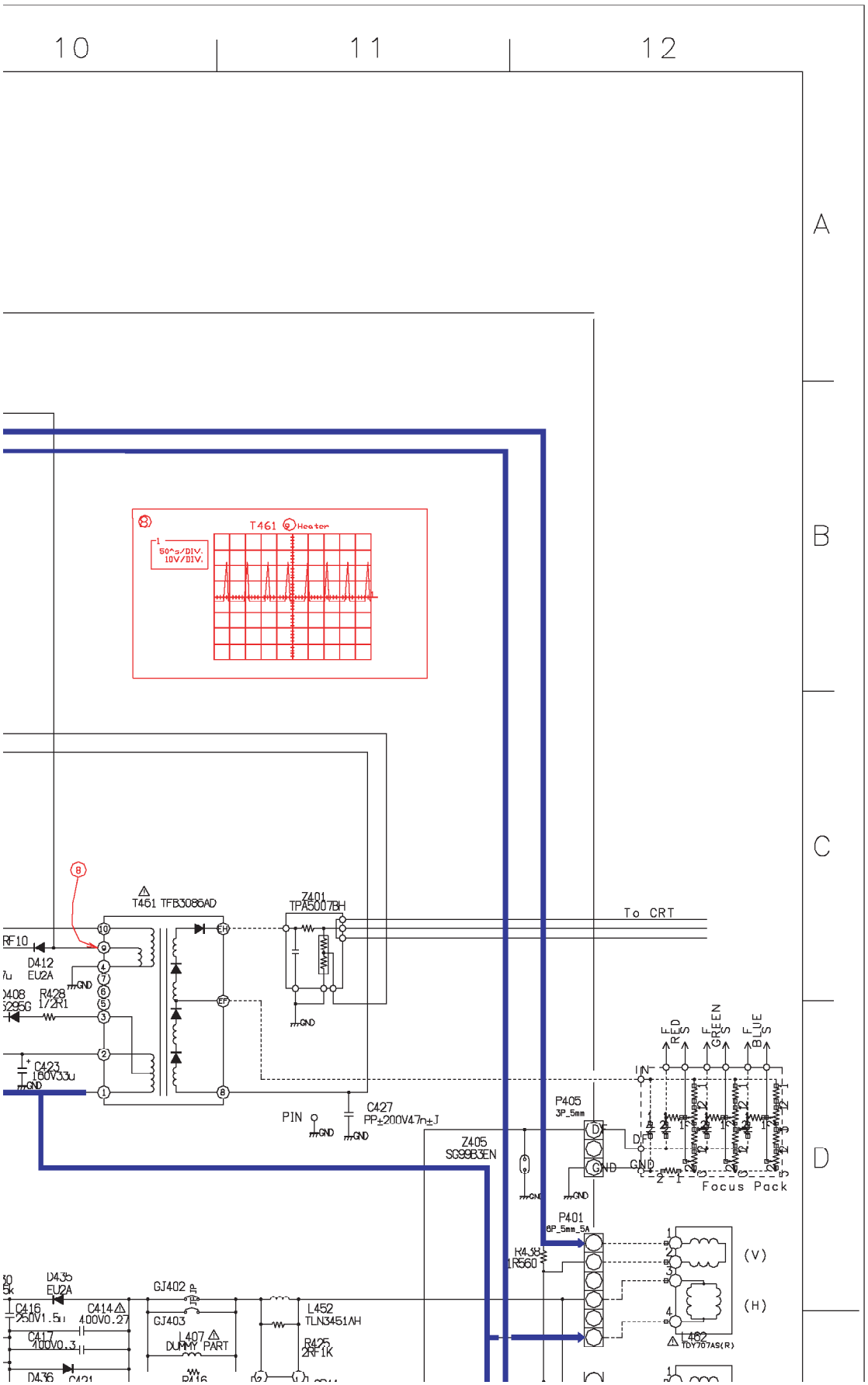

10
11
12
A
B
C
D
T461 Heater
50^s/DIV.
10V/DIV.
T461 TFB3086AD
Z401
TPA5007BH
To CRT
RF10
D412
EU2A
R428
1/2R1
C423
160V33u
PIN
C427
PP±200V47n±J
Z405
SG9983EN
P405
3P_5mm
P401
6P_5mm_5A
R438
1R560
Focus Pack
(V)
(H)
L462
TDY707AS(R)
D435
EU2A
C416
250V1.5u
C414
400V0.27
C417
400V0.3
GJ402
GJ403
L407
DUMMY PART
L452
TLN3451AH
R425
2RF1K

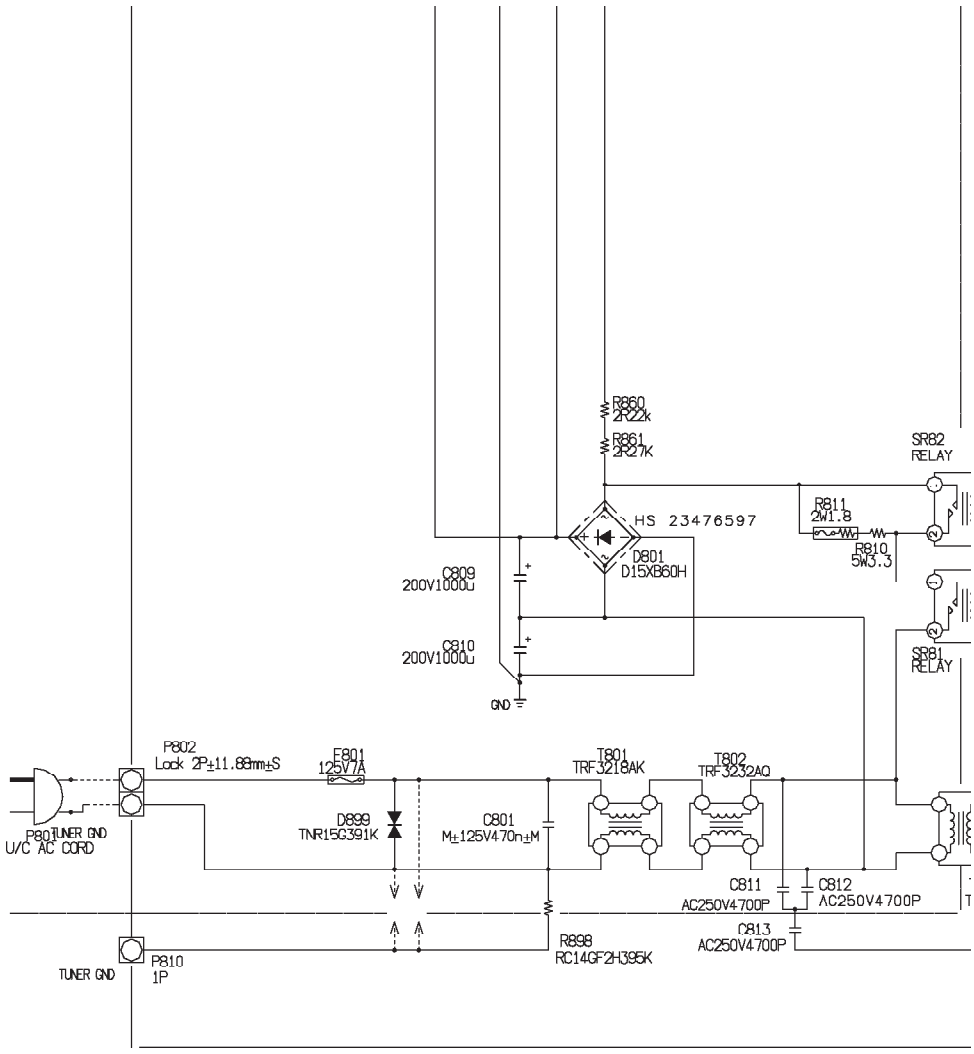

NOTE|

1. RESISTOR Resistance is shown in ohm (k = 1,000. M = 1,000,000) , All resistors are 1/6W and 5% tolerance carbon resistor,unless otherwise noted as the following marks.

1/2R | Metal or Metal oxide of 1/2 watt 1/2S | Solid of 1/2 watt

1RF | Fuse resistor of 1 watt 10W | Cement of 10 watts

K = ±10% G = ±2% F = ±1%

2.CAPACITOR

3. The parts

4. This schem
modification

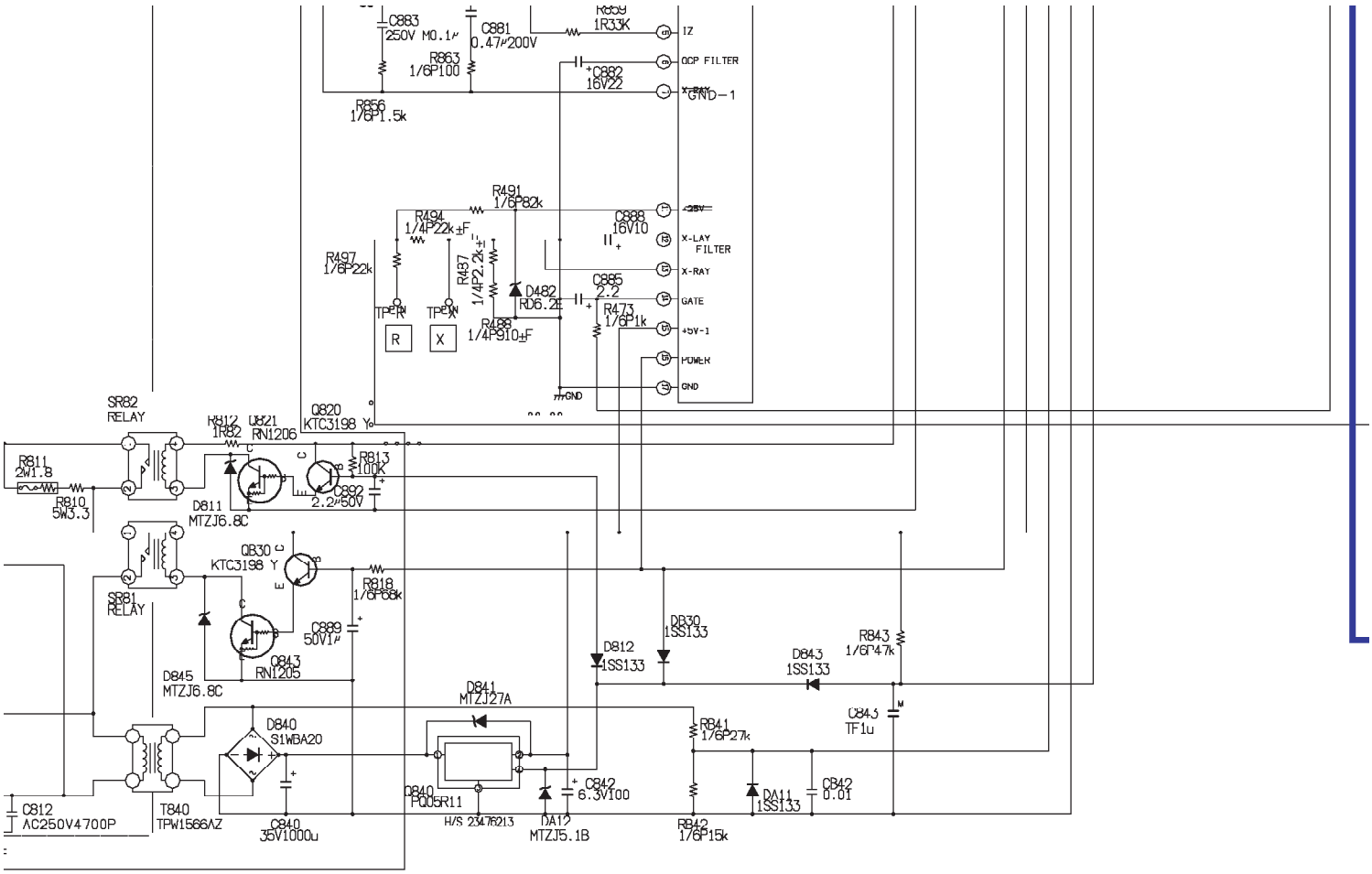

2.CAPACITOR Unless otherwise noted in schematic,all capacitor valuse less than 1 are expressed in μF,and the values more than 1 in pF.
All capacitors are ceramic 50V, unless otherwise noted as the following marks.

Electrolitic capacitor Mylar capacitor

3. The parts indicated with * have special characteristics should be replaced with identical parts only.

4. This schematic diagram is the latest the time of copying, so it must be changed in accordance with all informed modification notices.

3 | 4 | 5 | 6

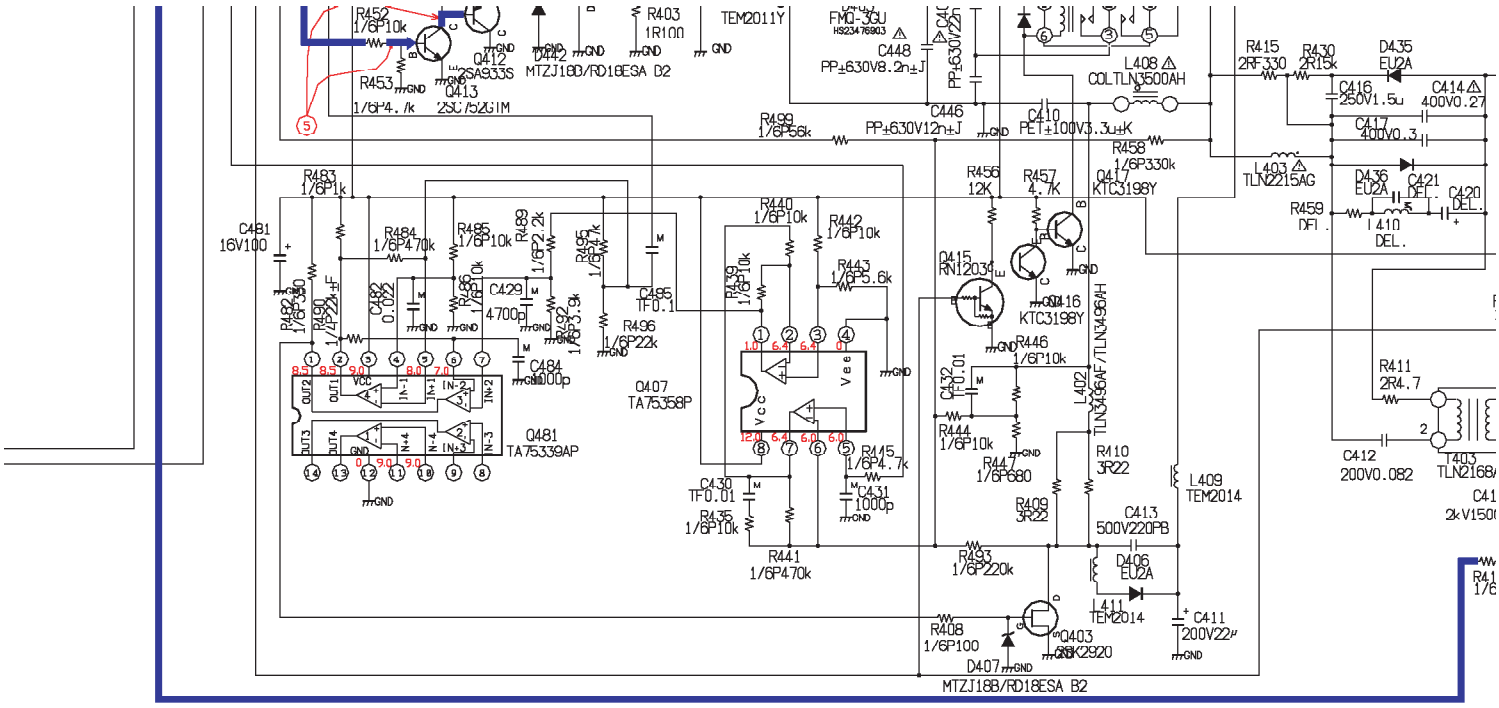
R452
1/6P10k
Q412
2SA933S
R453
1/6P4.7k
Q413
2SC752GTM
D442
MTZJ18B/RD18ESA B2
R403
1R100
TEM2011Y
FMQ-3GU
C448
PP±630V8.2n±J
C446
PP±630V12n±J
R499
1/6P56k
C410
PET±100V3.3u±K
L408
COLTLN3500AH
R458
1/6P330k
R415
2RF330
R430
2R15k
D435
EU2A
C416
250V1.5u
C414
400V0.27
C417
400V0.3
L403
TLN2215AG
D436
EU2A
C421
DEL.
C420
DEL.
R459
DEL.
L410
DEL.
R483
1/6P1k
C481
16V100
R484
1/6P470k
R485
1/6P10k
R489
1/6P2.2k
R495
1/6P4.7k
R482
1/6P330
R490
1/4P22k±F
C482
0.022
R486
1/6P10k
C429
4700p
R492
1/6P3.9k
C495
TF0.1
R496
1/6P22k
C484
1000p
Q481
TA75339AP
Q407
TA75358P
R440
1/6P10k
R442
1/6P10k
R439
1/6P10k
R443
1/6P5.6k
R445
1/6P4.7k
C430
TF0.01
R435
1/6P10k
C431
1000p
R441
1/6P470k
R456
12K
R457
4.7K
Q417
KTC3198Y
Q415
RN1203
Q416
KTC3198Y
R446
1/6P10k
C432
TF0.01
R444
1/6P10k
R447
1/6P680
L402
TLN3496AF/TLN3496AH
R410
3R22
R409
3R22
L409
TEM2014
C413
500V220PB
D406
EU2A
L411
TEM2014
R493
1/6P220k
R408
1/6P100
Q403
2SK2920
D407
MTZJ18B/RD18ESA B2
C411
200V22μ
R411
2R4.7
C412
200V0.082
T403
TLN2168A
C41
2kV150

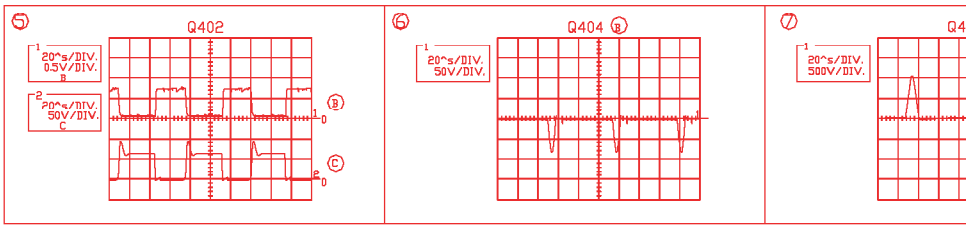
5
Q402
20^s/DIV.
0.5V/DIV.
B
20^s/DIV.
50V/DIV.
C
6
Q404
20^s/DIV.
50V/DIV.
7
20^s/DIV.
500V/DIV.

7 8 9 10

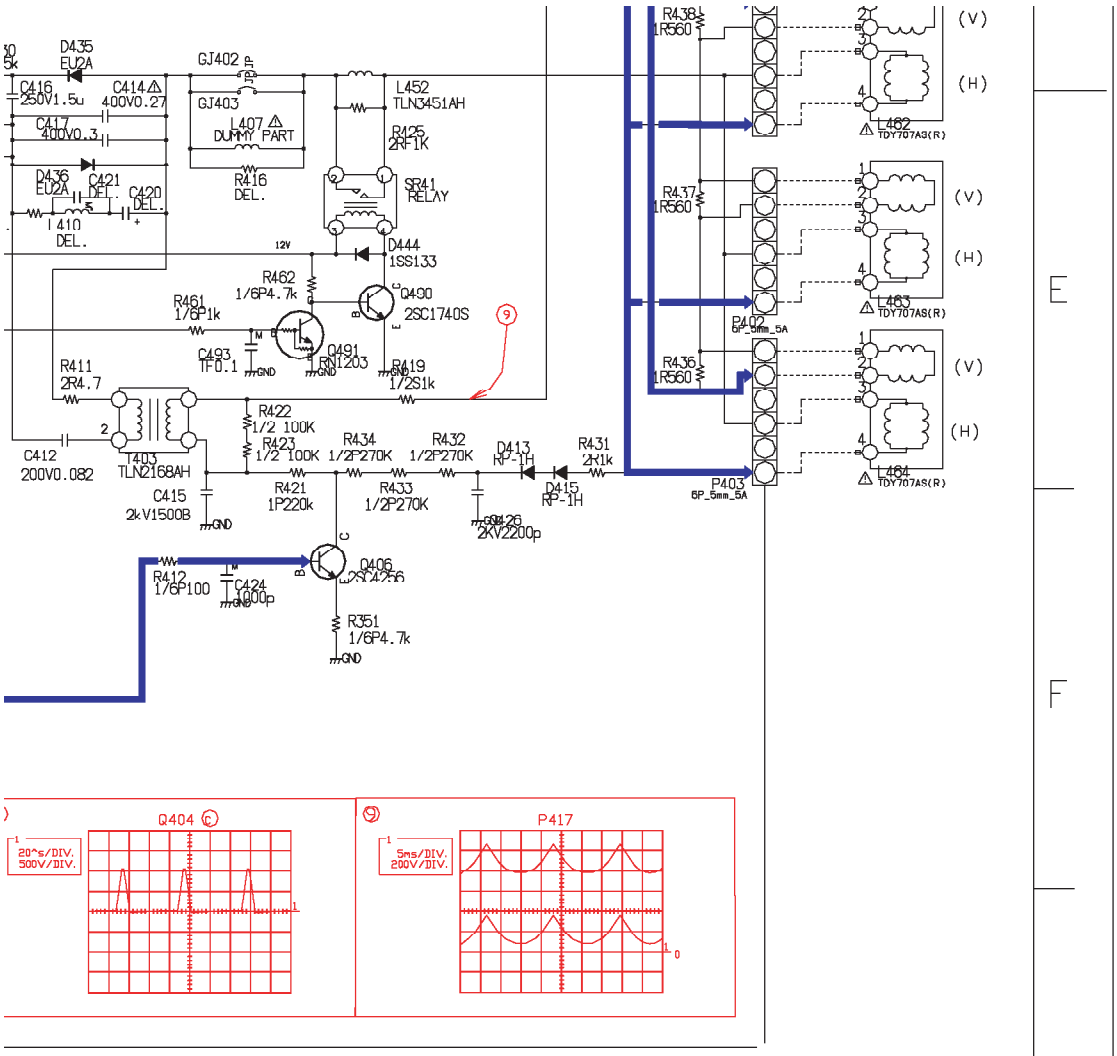

DEF/POW
56H80/40H80

E F G H

10 11 12

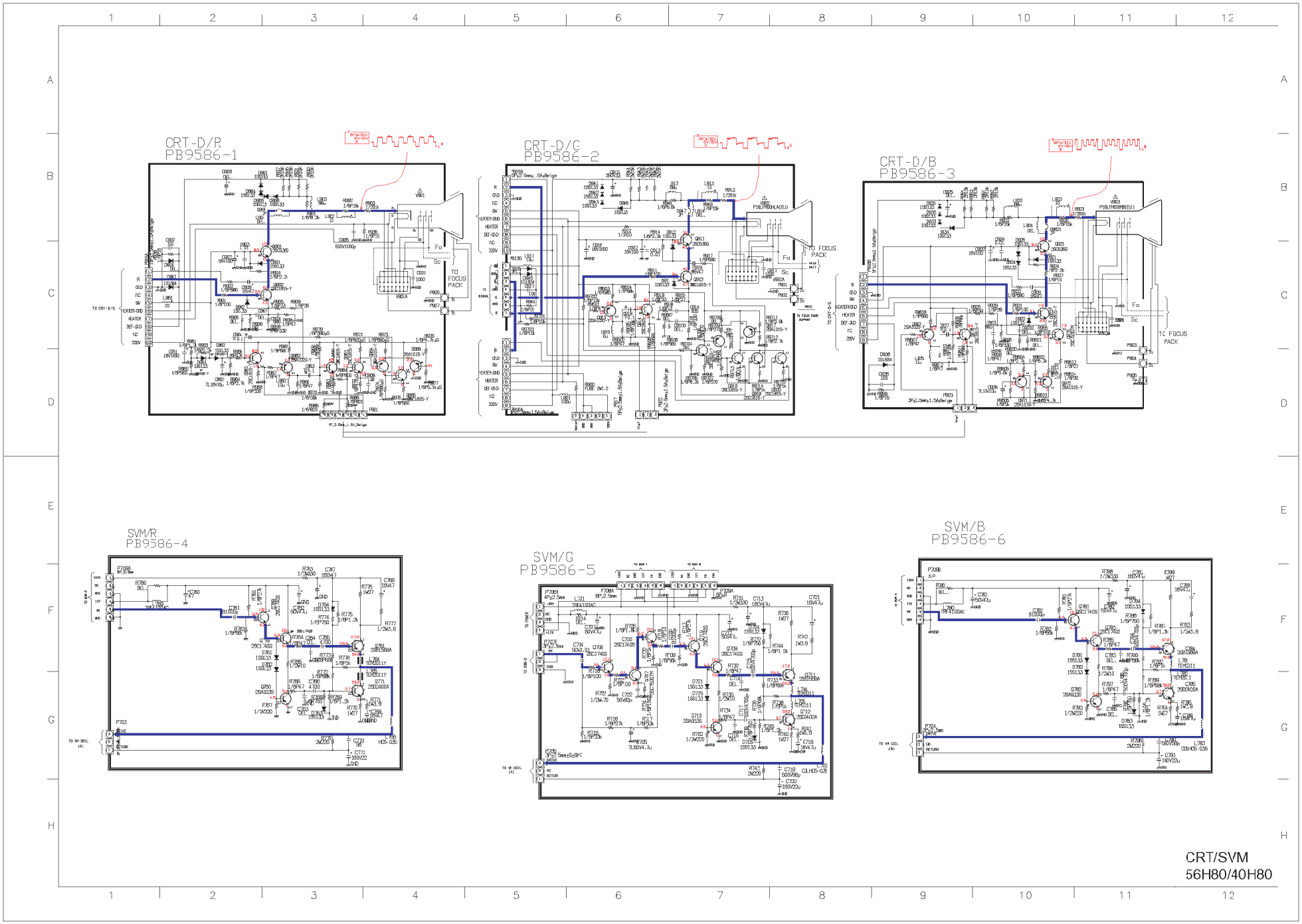
CRT-D/R
PB9586-1
CRT-D/G
PB9586-2
CRT-D/B
PB9586-3
SVM/R
PB9586-4
SVM/G
PB9586-5
SVM/B
PB9586-6
TO FOCUS PACK
CRT/SVM
56H80/40H80

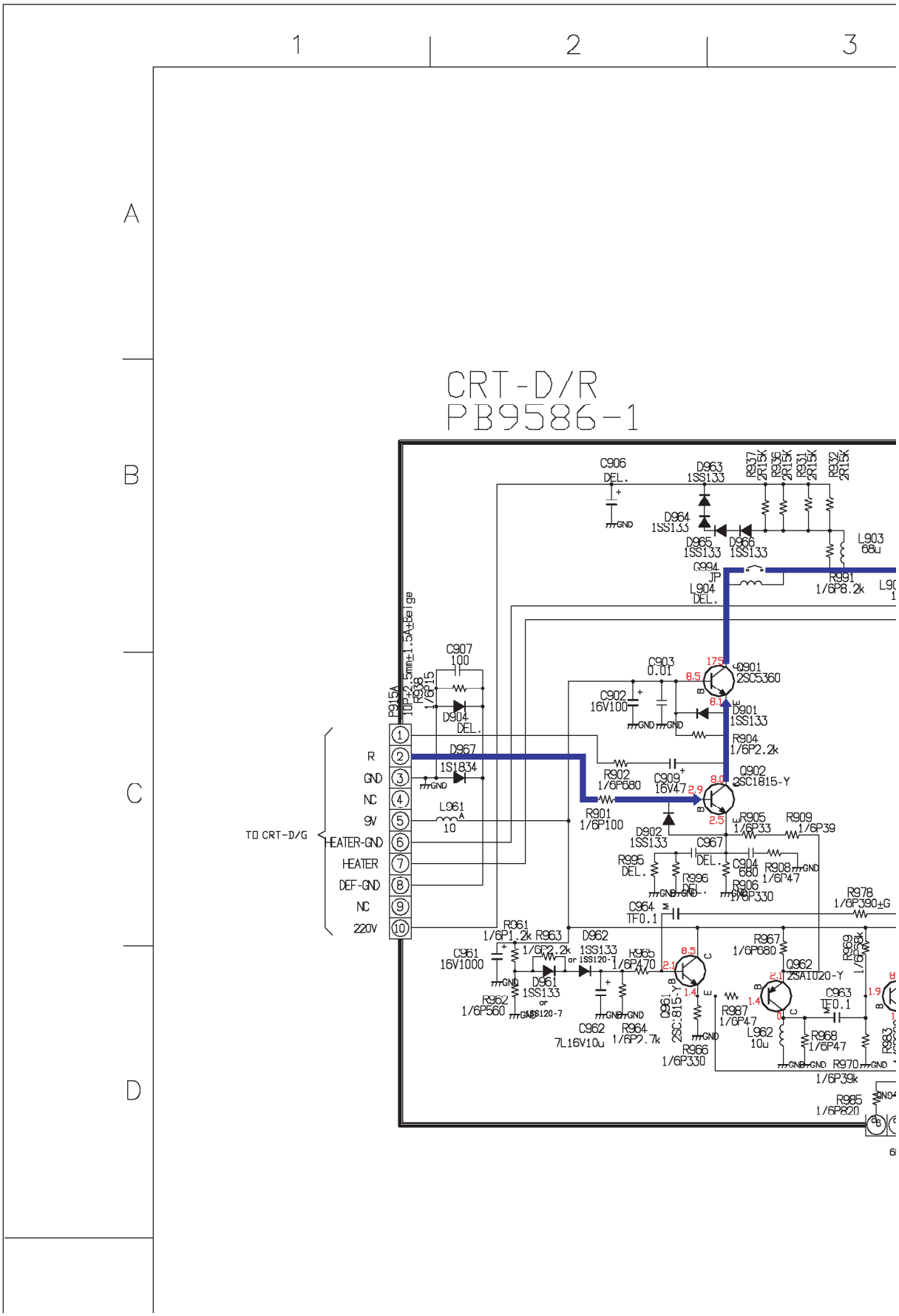
1
2
3
A
B
C
D
CRT-D/R
PB9586-1
TO CRT-D/G
R
GND
NC
9V
HEATER-GND
HEATER
DEF-GND
NC
220V
P915A
C906
DEL.
D963
1SS133
R937
2R15K
R936
2R15K
R931
2R15K
R932
2R15K
D964
1SS133
D965
1SS133
D966
1SS133
L903
68u
Q994
JP
L904
DEL.
R991
1/6P8.2k
C907
100
R938
1/6P15
D904
DEL.
D967
1S1834
L961
10
C903
0.01
Q901
2SC5360
C902
16V100
D901
1SS133
R904
1/6P2.2k
R902
1/6P680
C909
16V47
Q902
2SC1815-Y
R901
1/6P100
D902
1SS133
R905
1/6P33
R909
1/6P39
C967
DEL.
R995
DEL.
R996
DEL.
C904
680
R908
1/6P47
R906
1/6P330
C964
TF0.1
R978
1/6P390±G
R961
1/6P1.2k
R963
1/6P2.2k
D962
1SS133
R965
1/6P470
C961
16V1000
D961
1SS133
R962
1/6P560
C962
7L16V10u
R964
1/6P2.7k
Q961
2SC815-Y
R966
1/6P330
R967
1/6P680
Q962
2SA1020-Y
R987
1/6P4.7
L962
10u
C963
TF0.1
R968
1/6P47
R970
1/6P39k
R985
1/6P820

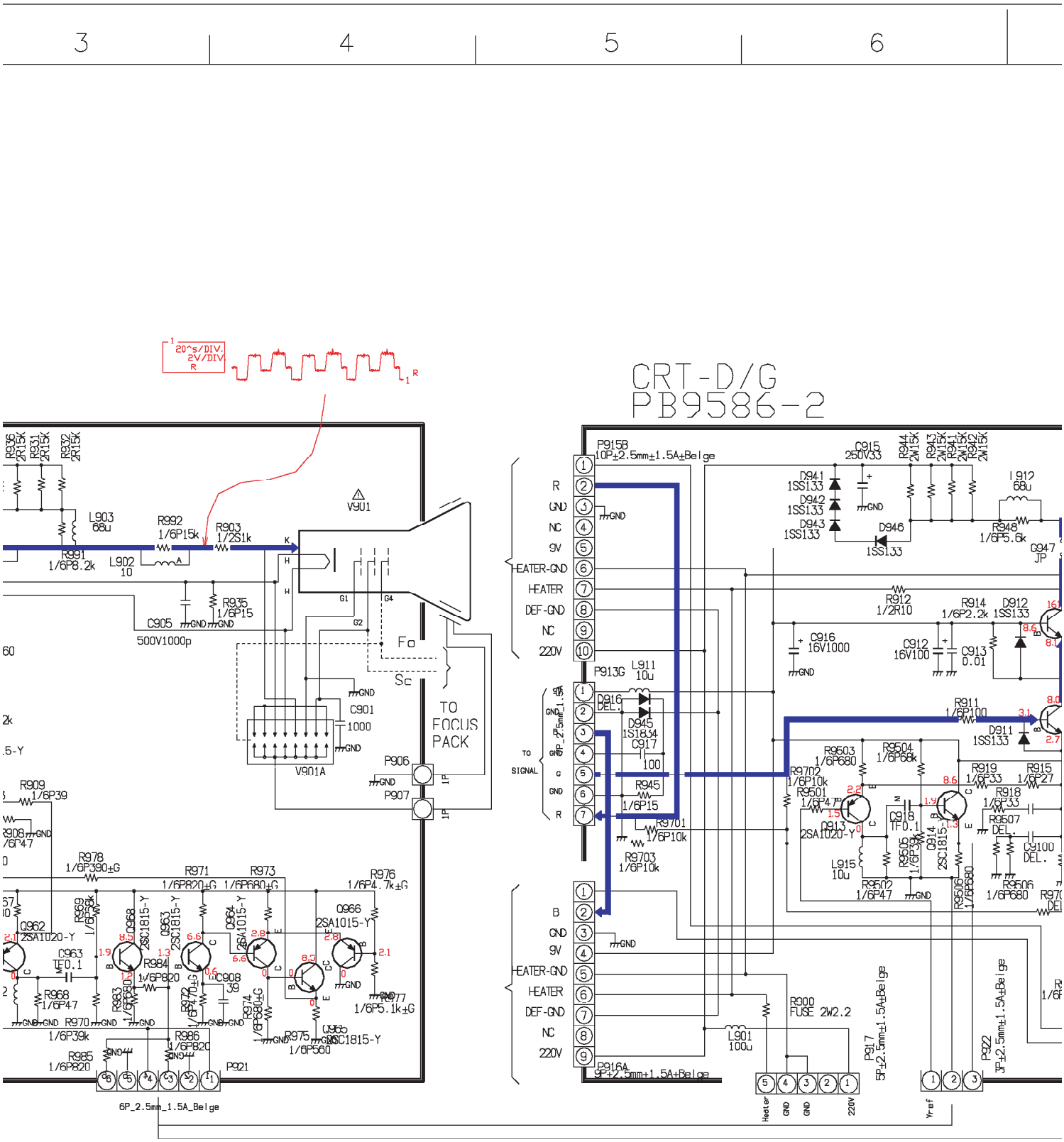
3
4
5
6
CRT-D/G
PB9586-2
20^s/DIV.
2V/DIV
R
V901
V901A
TO FOCUS PACK
P906
P907
P921
6P_2.5mm_1.5A_Belge
P915B
10P±2.5mm±1.5A±Belge
P913G
P916A
9P±2.5mm±1.5A±Belge
P917
5P±2.5mm±1.5A±Belge
P922
3P±2.5mm±1.5A±Belge
TO SIGNAL
R
GND
NC
9V
HEATER-GND
HEATER
DEF-GND
NC
220V
B
GND
9V
HEATER-GND
HEATER
DEF-GND
NC
220V
R900
FUSE 2W2.2
L901
100u
Heater
GND
GND
220V
Vref

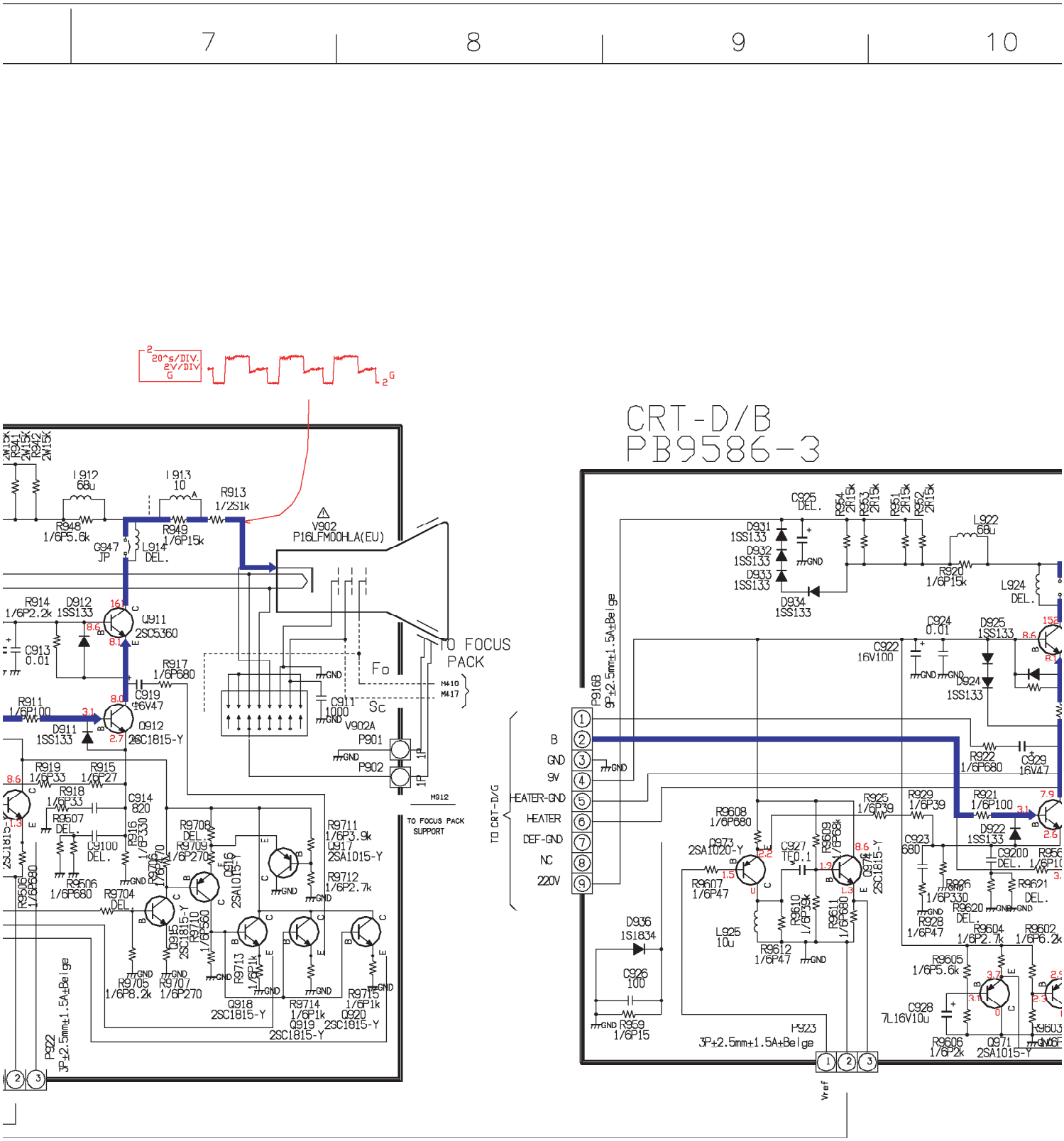
7
8
9
10
CRT-D/B
PB9586-3
20^s/DIV.
2V/DIV
G
V902
P16LFM00HLA(EU)
TO FOCUS PACK
TO FOCUS PACK SUPPORT
Fo
Sc
V902A
P901
P902
M410
M417
M912
P916B
9P±2.5mm±1.5A±Beige
TO CRT-D/G
B
GND
9V
HEATER-GND
HEATER
DEF-GND
NC
220V
P923
3P±2.5mm±1.5A±Beige
P922
3P±2.5mm±1.5A±Beige
Vref

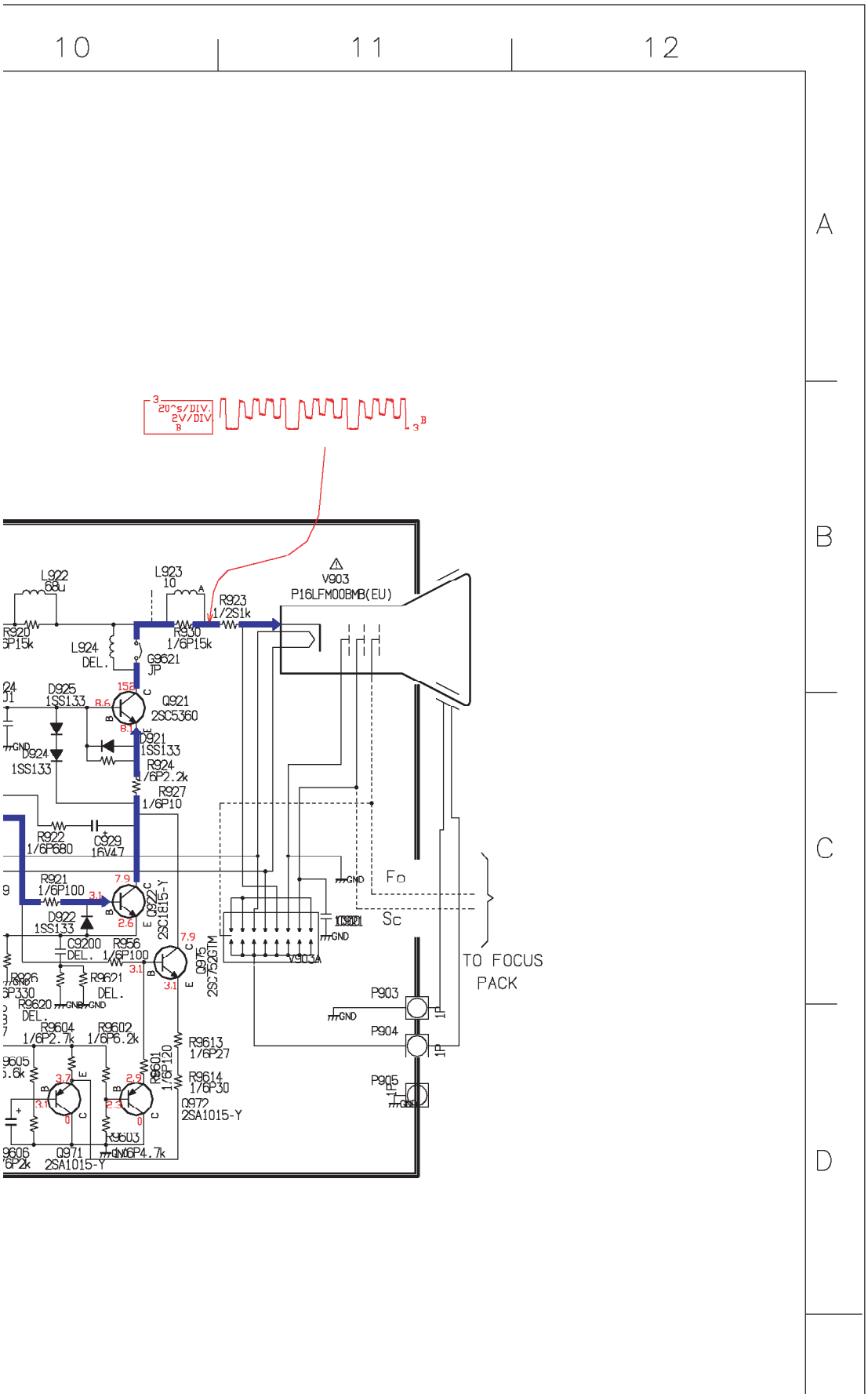
10
11
12
A
B
C
D
20^s/DIV.
2V/DIV
L922
68u
L923
10
R923
1/2S1k
V903
P16LFM00BMB(EU)
R920
6P15k
L924
DEL.
R930
1/6P15k
G9621
JP
D925
1SS133
Q921
2SC5360
D921
1SS133
D924
1SS133
R924
/6P2.2k
R927
1/6P10
R922
1/6P680
C929
16V47
R921
1/6P100
Q922
2SC1815-Y
D922
1SS133
C9200
DEL.
R956
1/6P100
Q975
2SC7523TM
V903A
R9621
DEL.
R9620
DEL.
R9604
1/6P2.7k
R9602
1/6P6.2k
R9613
1/6P27
R9601
1/6P120
R9614
1/6P30
Q972
2SA1015-Y
R9603
6P4.7k
Q971
2SA1015-Y
GND
Fo
Sc
TO FOCUS
PACK
P903
P904
P905
1P

SVM/R
PB9586-4

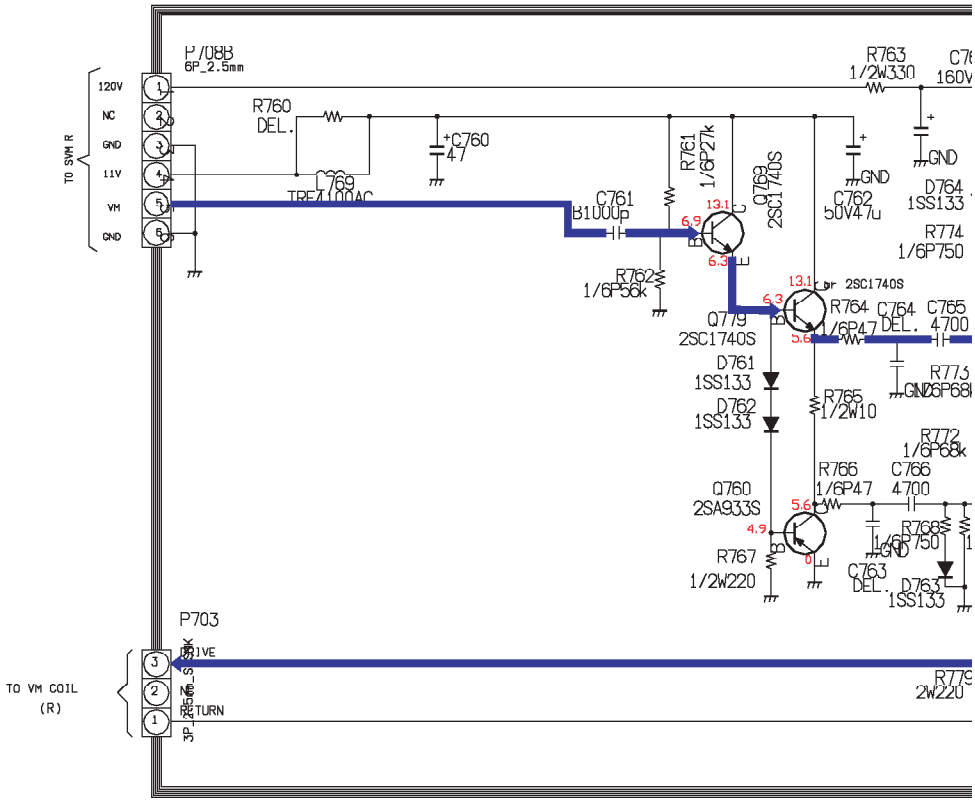

1 2 3

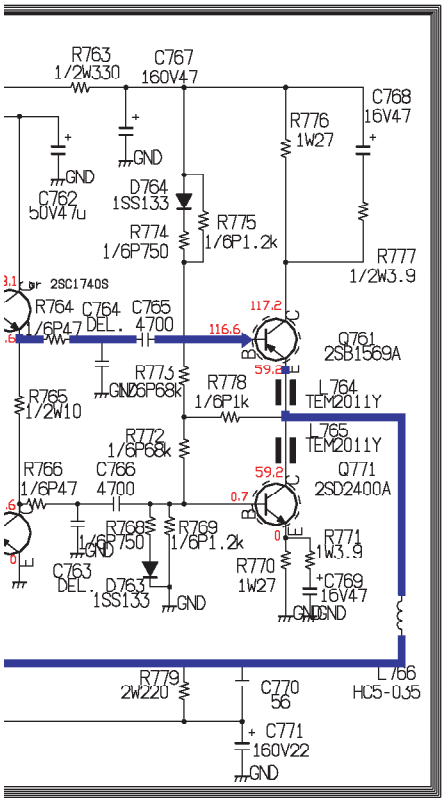
R763
1/2W330
C767
160V47
C768
16V47
R776
1W27
GND
C762
50V47u
D764
1SS133
R775
1/6P1.2k
R774
1/6P750
R777
1/2W3.9
2SC1740S
R764
1/6P47
C764
DEL.
C765
4700
117.2
116.6
Q761
2SB1569A
R773
6P68k
R778
1/6P1k
L764
TEM2011Y
R765
1/2W10
R772
1/6P68k
L765
TEM2011Y
R766
1/6P47
C766
4700
59.2
Q771
2SD2400A
R768
1/6P750
R769
1/6P1.2k
R771
1W3.9
C763
DEL.
D763
1SS133
R770
1W27
C769
16V47
R779
2W220
C770
56
L766
HC5-035
C771
160V22

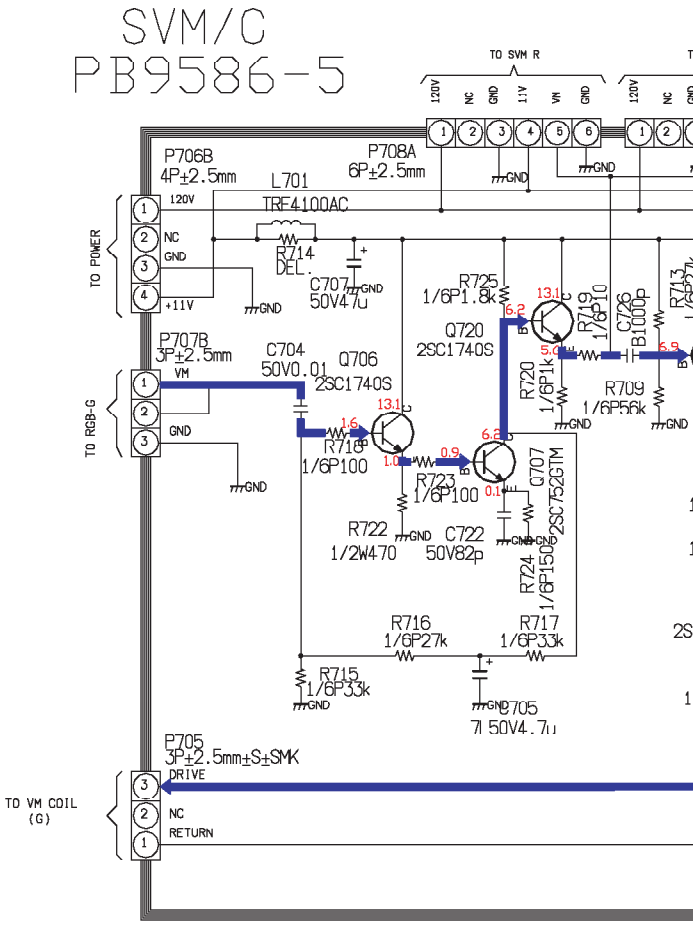
SVM/C
PB9586-5
TO SVM R
120V
NC
GND
11V
VM
P706B
4P±2.5mm
P708A
6P±2.5mm
L701
TRF4100AC
TO POWER
R714
DEL.
C707
50V47u
+11V
R725
1/6P1.8k
Q720
2SC1740S
R719
1/6P10
C726
B1000p
P707B
3P±2.5mm
C704
50V0.01
Q706
2SC1740S
TO RGB-G
R720
1/6P1k
R709
1/6P56k
R718
1/6P100
R723
1/6P100
Q707
2SC752GTM
R722
1/2W470
C722
50V82p
R724
1/6P150
R716
1/6P27k
R717
1/6P33k
R715
1/6P33k
Q705
P705
3P±2.5mm±S±SMK
DRIVE
TO VM COIL
(G)
NC
RETURN

3 4 5 6

SVM/B
PB9586-6

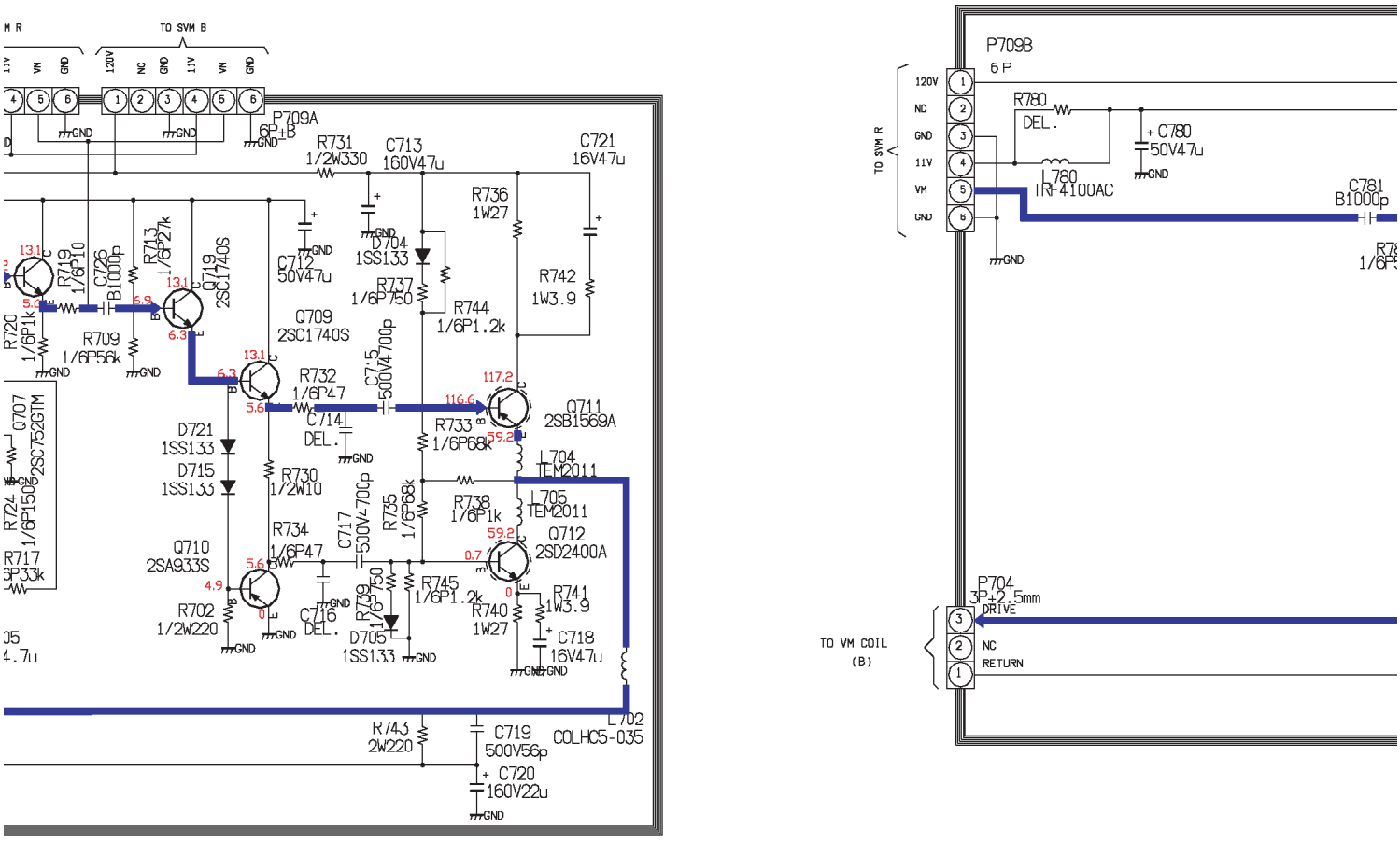

7 8 9 10

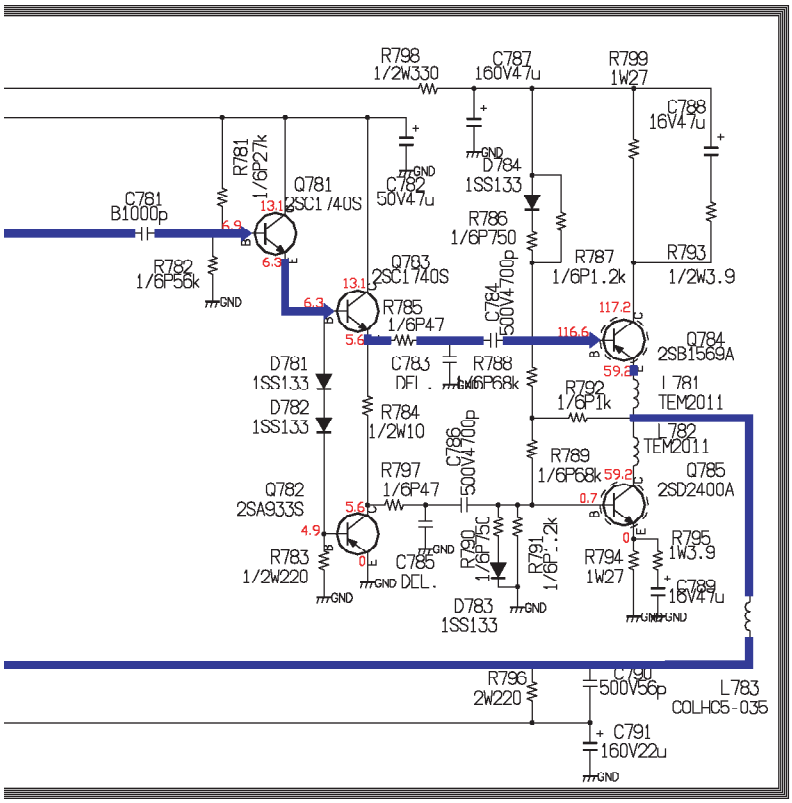

CRT/SVM
56H80/40H80

10 11 12

E F G H

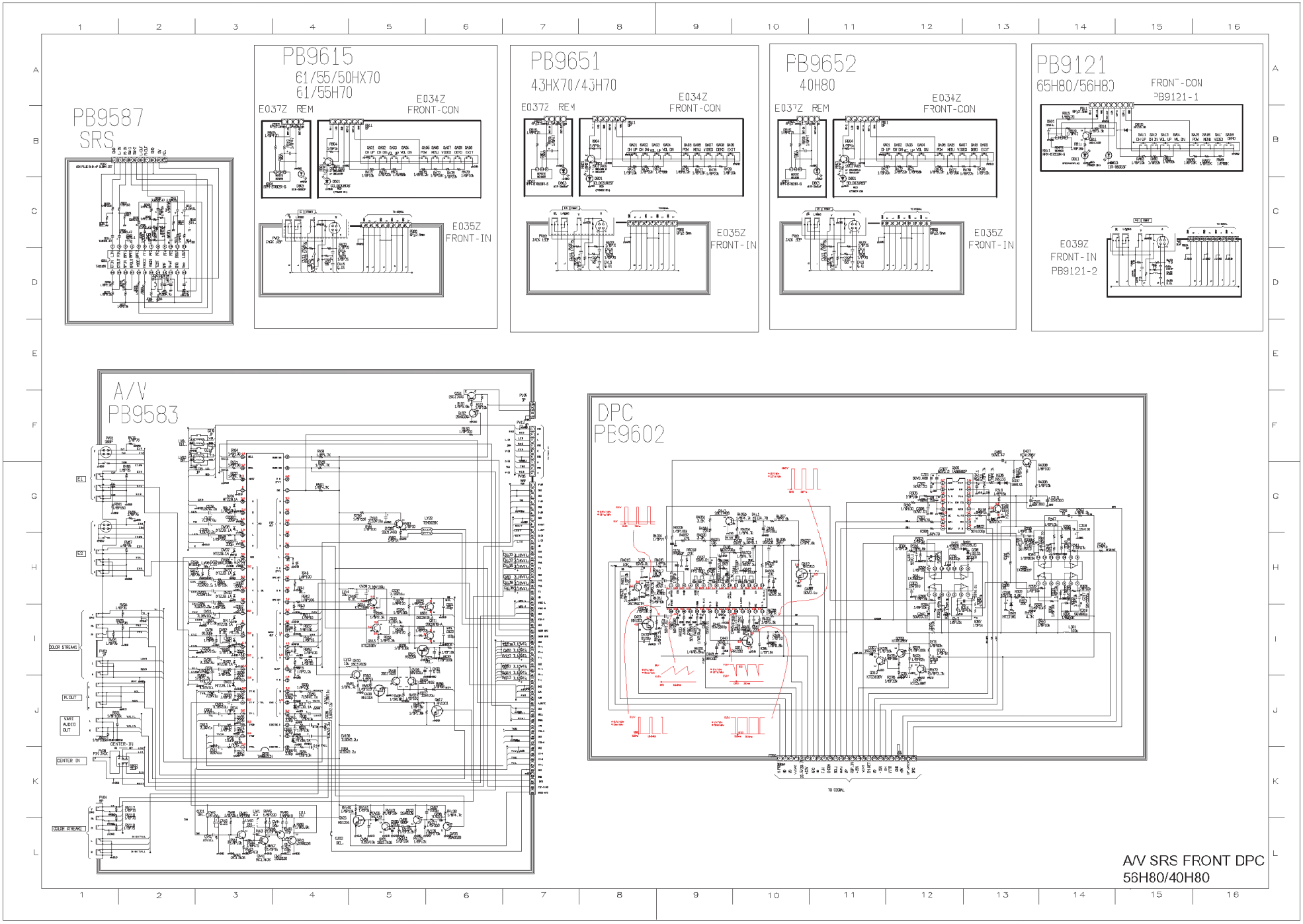

A/V SRS FRONT DPC
56H80/40H80

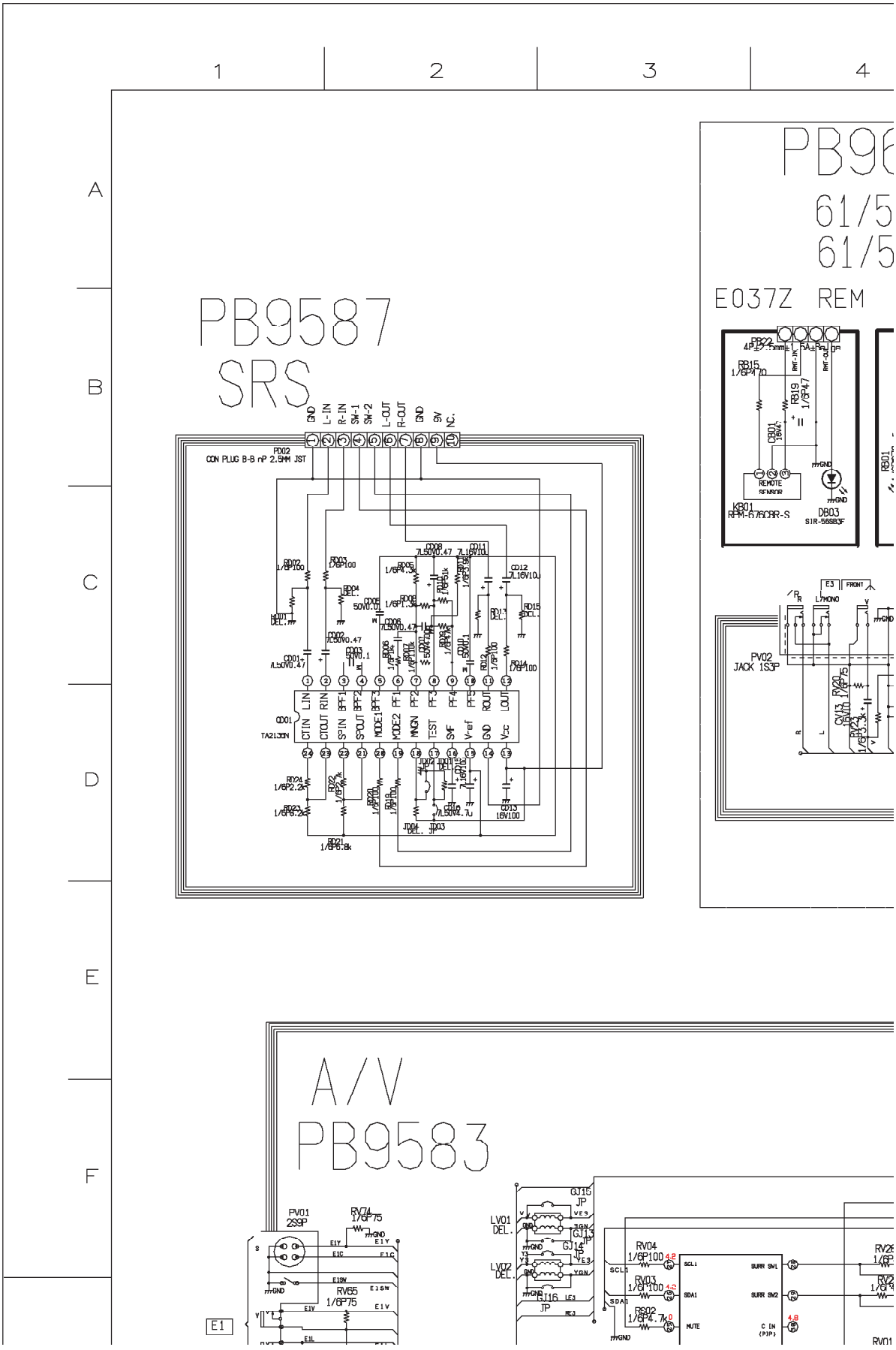

PB9587
SRS
PD02
CON PLUG B-B nP 2.5MM JST
GND
L-IN
R-IN
SW-1
SW-2
L-OUT
R-OUT
GND
9V
NC.
QD01
TA2136N
PB96
61/5
61/5
E037Z REM
KB01
RPM-676CBR-S
DB03
SIR-56SB3F
PV02
JACK 1S3P
A/V
PB9583
PV01
2S9P
RV74
1/6P75
RV65
1/6P75
LV01
DEL.
LV02
DEL.
GJ15
JP
GJ14
JP
GJ16
JP
RV04
1/6P100
RV03
1/6P100
RV02
1/6P4.7k
SCL1
SDA1
MUTE
SURR SW1
SURR SW2
C IN
(PIP)
E1

4 | 5 | 6 | 7 | 8

PB9615

61/55/50HX70
61/55H70

E034Z
FRONT-CON

7Z REM

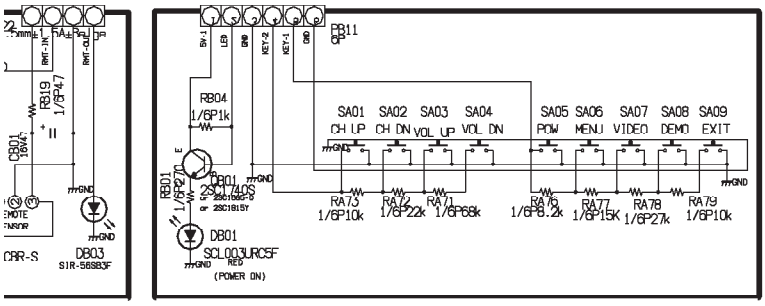

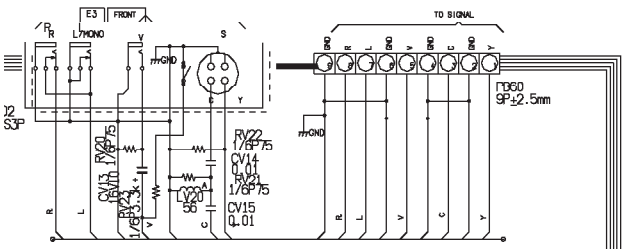

E035Z
FRONT-IN

PB9651

43HX70/43H70

E037Z REM

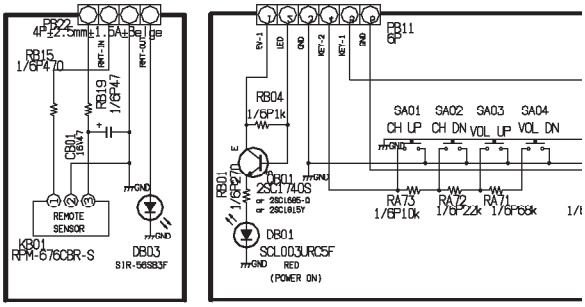

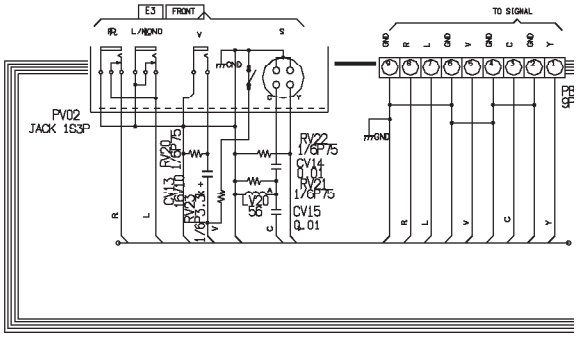

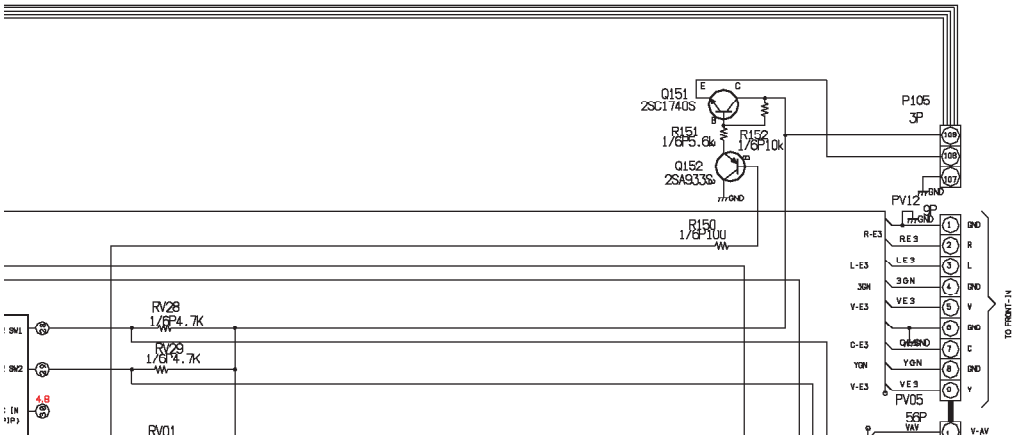

DPC
PB9602

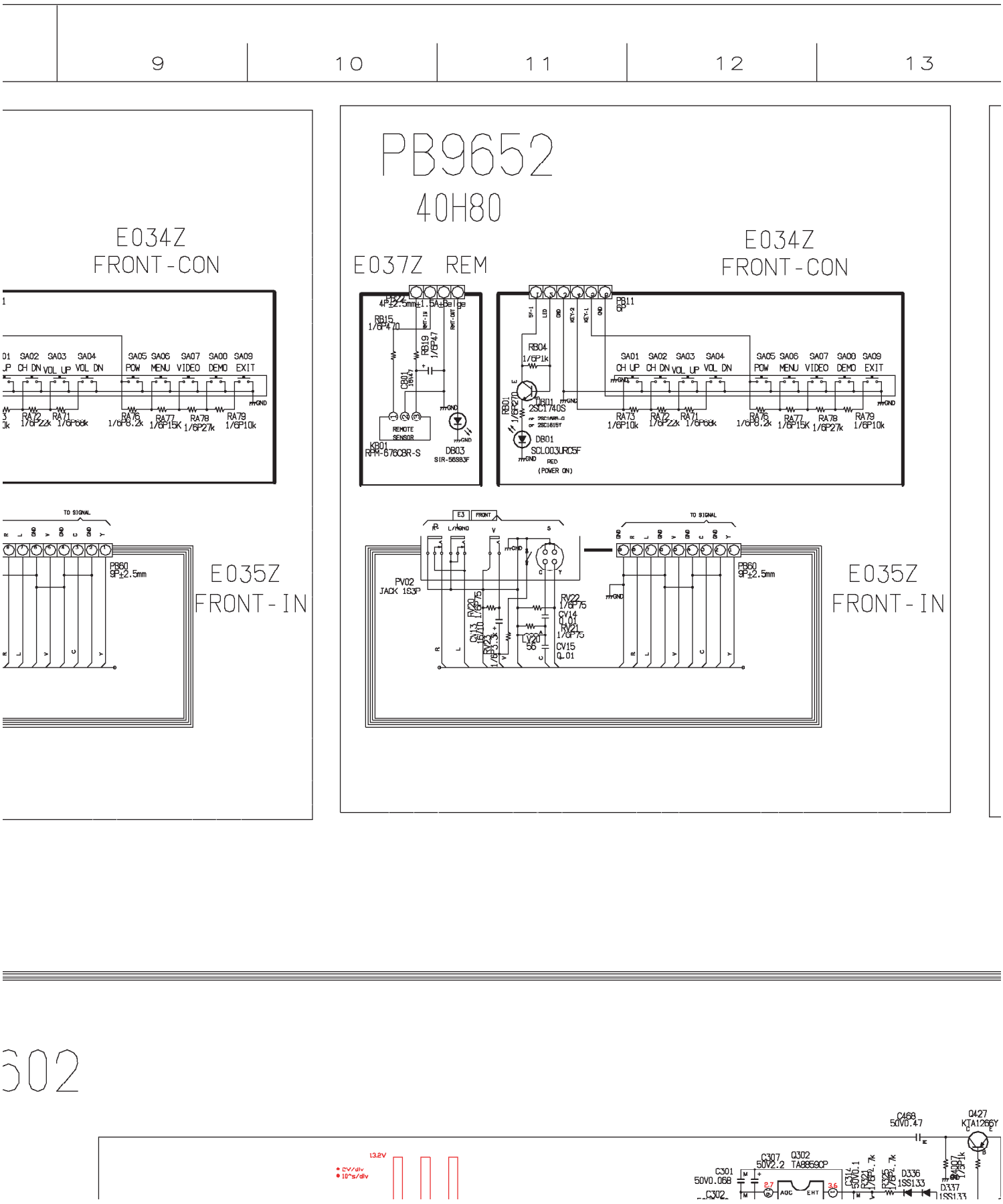
9
10
11
12
13
PB9652
40H80
E034Z
FRONT-CON
E037Z REM
E034Z
FRONT-CON
E035Z
FRONT-IN
E035Z
FRONT-IN
TO SIGNAL
PB60
9P±2.5mm
PV02
JACK 1S3P
PB11
6P
KB01
RPM-676CBR-S
DB03
SIR-56SB3F
DB01
SCL003URC5F
RED
(POWER ON)
REMOTE
SENSOR
602
C468
50V0.47
Q427
KTA1266Y
C307
50V2.2
Q302
TA8859CP
C301
50V0.068
D336
1SS133
D337
1SS133

13 14 15 16

A B C D E F

PB9121

65H80/56H80

FRONT-CON

PB9121-1

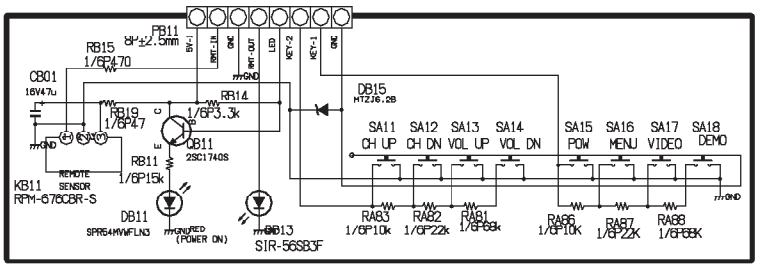

E039Z

FRONT-IN

PB9121-2

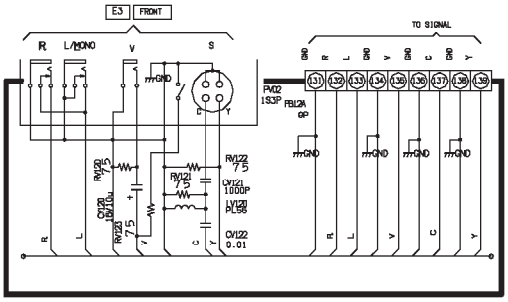

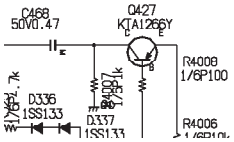

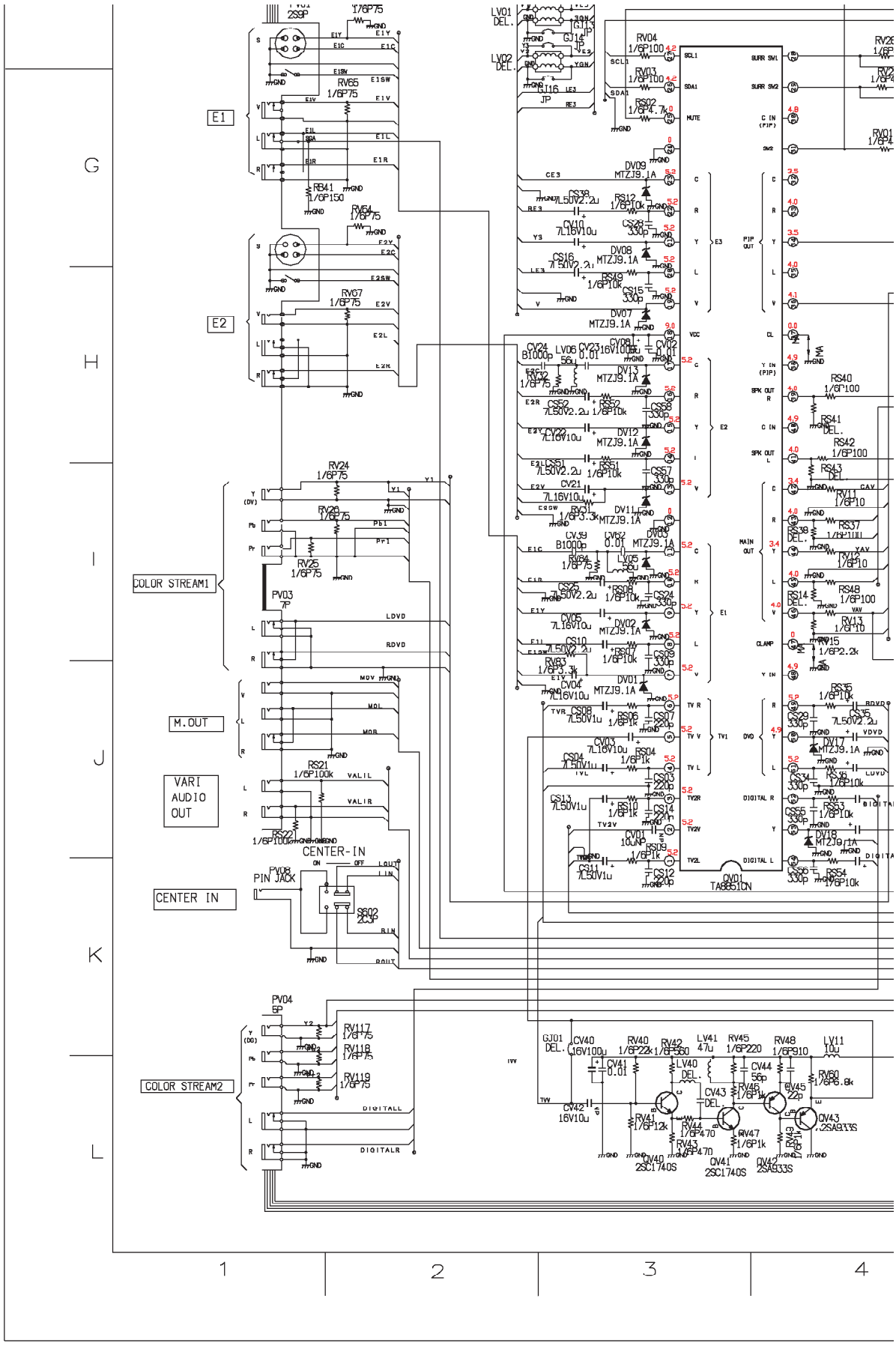
E1
E2
COLOR STREAM1
M.OUT
VARI AUDIO OUT
CENTER IN
COLOR STREAM2
CENTER-IN
PIN JACK
TA8851CN
G
H
I
J
K
L
1
2
3
4

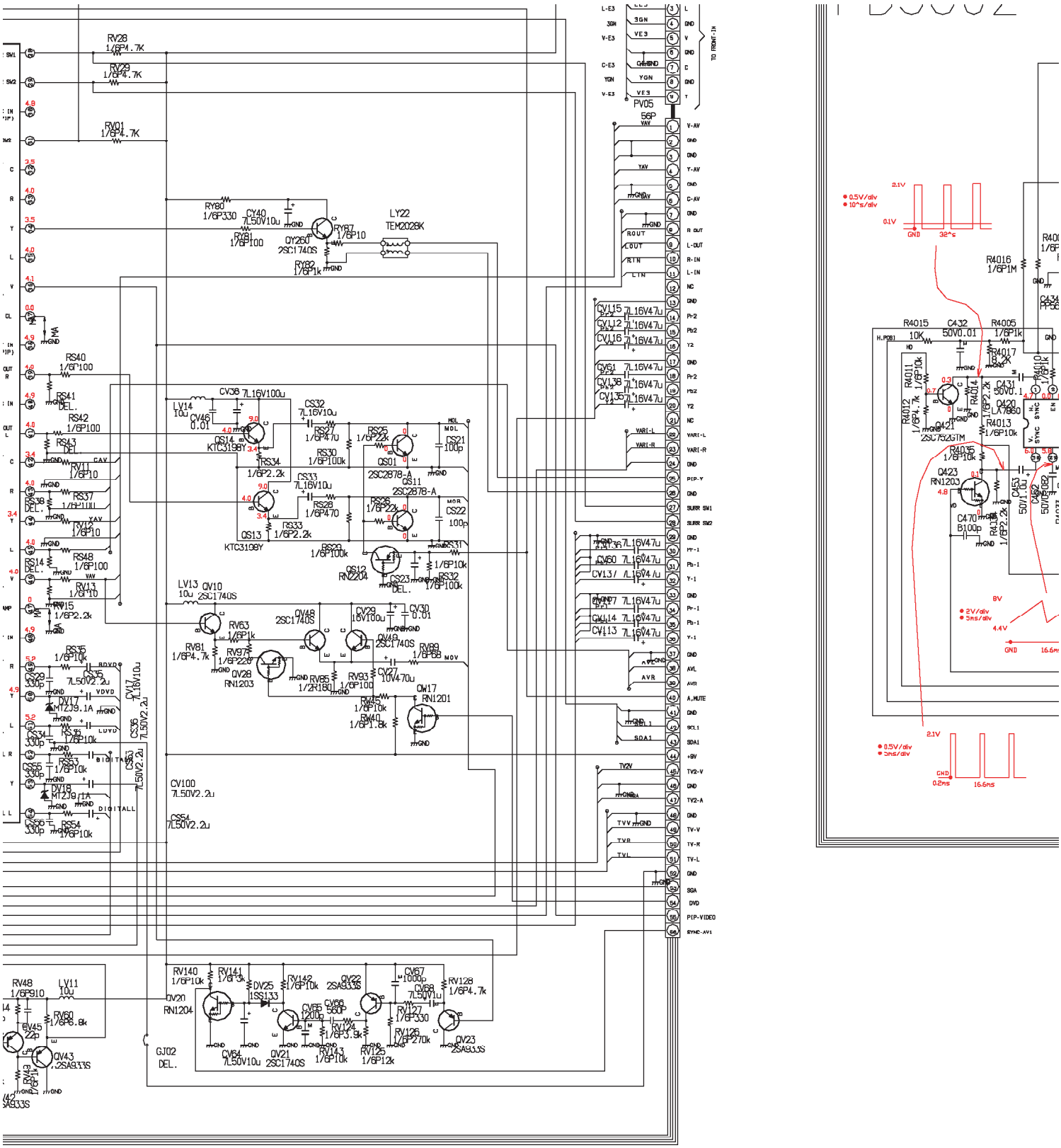
PV05
56P
TO FRONT-IN
LY22
TEM2028K
RV28
1/6P4.7K
RV29
1/6P4.7K
RV01
1/6P4.7K
RY80
1/6P330
CY40
7L50V10u
RY81
1/6P100
RY87
1/6P10
QY26D
2SC1740S
RY82
1/6P1k
RS40
1/6P100
RS41
DEL.
RS42
1/6P100
RS43
DEL.
RV11
1/6P10
RS38
DEL.
RS37
1/6P100
RV12
1/6P10
RS14
DEL.
RS48
1/6P100
RV13
1/6P10
RV15
1/6P2.2k
RS35
1/6P10k
CS29
330p
CS35
7L50V2.2u
DV17
MTZJ9.1A
CS34
330p
RS36
1/6P10k
CS36
7L50V2.2u
CS33
7L50V2.2u
CS25
330p
RS33
1/6P10k
DV18
MTZJ9.1A
CS26
330p
RS54
1/6P10k
CV17
7L16V10u
CV38 7L16V100u
LV14
10u
CV46
0.01
QS14
KTC3198Y
RS34
1/6P2.2k
CS32
7L16V10u
RS27
1/6P470
RS30
1/6P100k
RS25
1/6P22k
QS01
2SC2878-A
CS21
100p
CS33
7L16V10u
RS28
1/6P470
RS26
1/6P22k
QS11
2SC2878-A
CS22
100p
RS33
1/6P2.2k
QS13
KTC3198Y
RS29
1/6P100k
RS31
1/6P10k
QS12
RN2204
CS23
DEL.
RS32
1/6P100k
LV13
10u
QV10
2SC1740S
RV63
1/6P1k
RV81
1/6P4.7k
RV97
1/6P220
QV28
RN1203
QV48
2SC1740S
CV29
16V100u
CV30
0.01
QV49
2SC1740S
RV89
1/6P68
RV85
1/2R180
RV93
1/6P100
CV27
10V470u
RV45
1/6P10k
RV40
1/6P1.8k
QW17
RN1201
CV100
7L50V2.2u
CS54
7L50V2.2u
CV115 7L16V47u
CV112 7L16V47u
CV116 7L16V47u
CV61 7L16V47u
CV138 7L16V47u
CV135 7L16V47u
CV136 7L16V47u
CV60 7L16V47u
CV137 7L16V47u
CV7 7L16V47u
CV114 7L16V47u
CV113 7L16V47u
RV48
1/6P910
LV11
10u
RV60
1/6P6.8k
CV45
22p
QV43
2SA933S
RV43
1/6P1k
GJ02
DEL.
RV140
1/6P10k
RV141
1/6P3k
QV20
RN1204
DV25
1SS133
RV142
1/6P10k
CV64
7L50V10u
QV21
2SC1740S
CV65
1200p
CV66
560P
RV124
1/6P3.9k
QV22
2SA933S
RV143
1/6P10k
CV67
1000p
CV68
7L50V1u
RV125
1/6P12k
RV127
1/6P330
RV126
1/6P270k
RV128
1/6P4.7k
QV23
2SA933S
R4016
1/6P1M
R4015
10K
C432
50V0.01
R4005
1/6P1k
R4011
1/6P10k
R4012
1/6P4.7k
Q421
2SC7523TM
R4014
1/6P2.2k
R4017
18.2K
C431
50V0.1
Q420
LA7860
R4013
1/6P10k
R4035
1/6P10k
Q423
RN1203
C470
B100p
R4036
1/6P2.2k
C453
50V1.0u
C452
50V0.082
0.5V/div
10^s/div
2.1V
0.1V
GND
32^s
2V/div
5ms/div
8V
4.4V
16.6ms
0.2ms

4 | 5 | 6 | 7 | 8

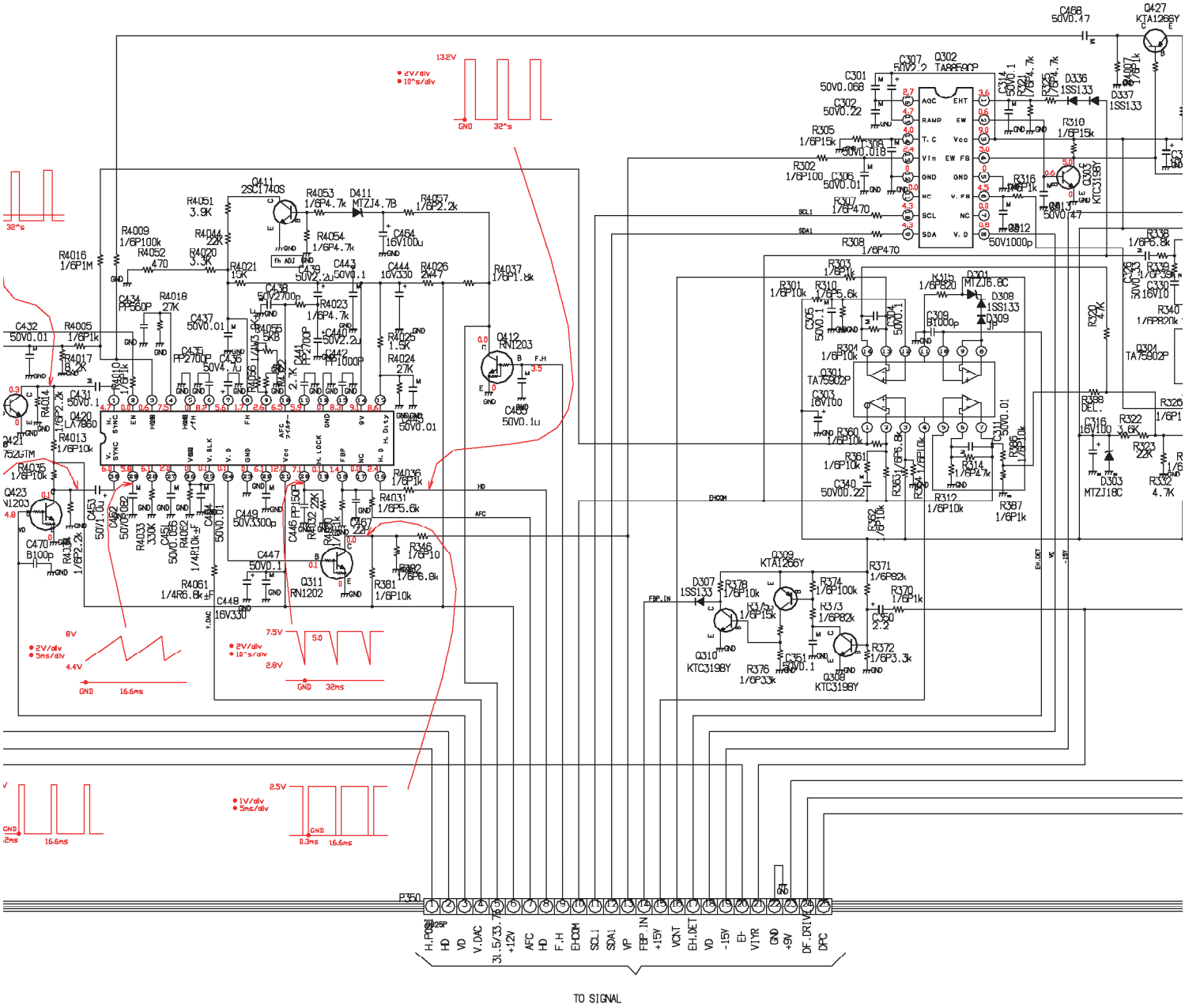
P350
H.POS
HD
VD
V.DAC
3L.5/33.7R
+12V
AFC
HD
F.H
EHCOM
SCL1
SDA1
VP
FBP IN
+15V
VCNT
EH.DET
VD
-15V
EH-
V1YR
GND
+9V
DF.DRIVE
DFC
TO SIGNAL

	9	10	11	12	13

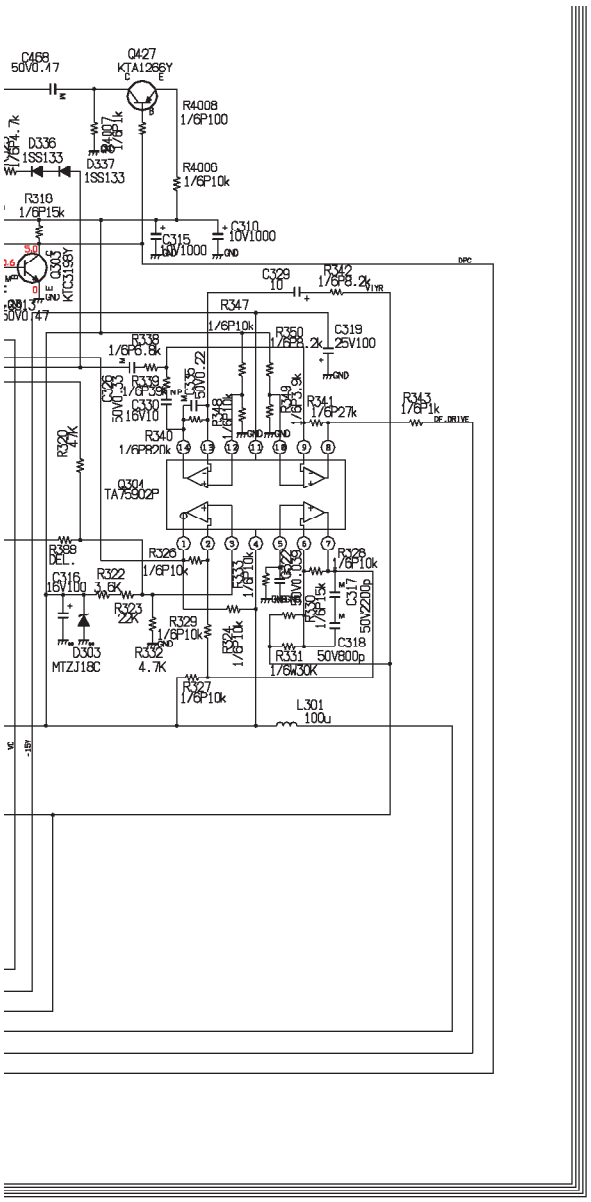

A/V SRS FRONT DPC
56H80/40H80

G H I J K L

13 14 15 16

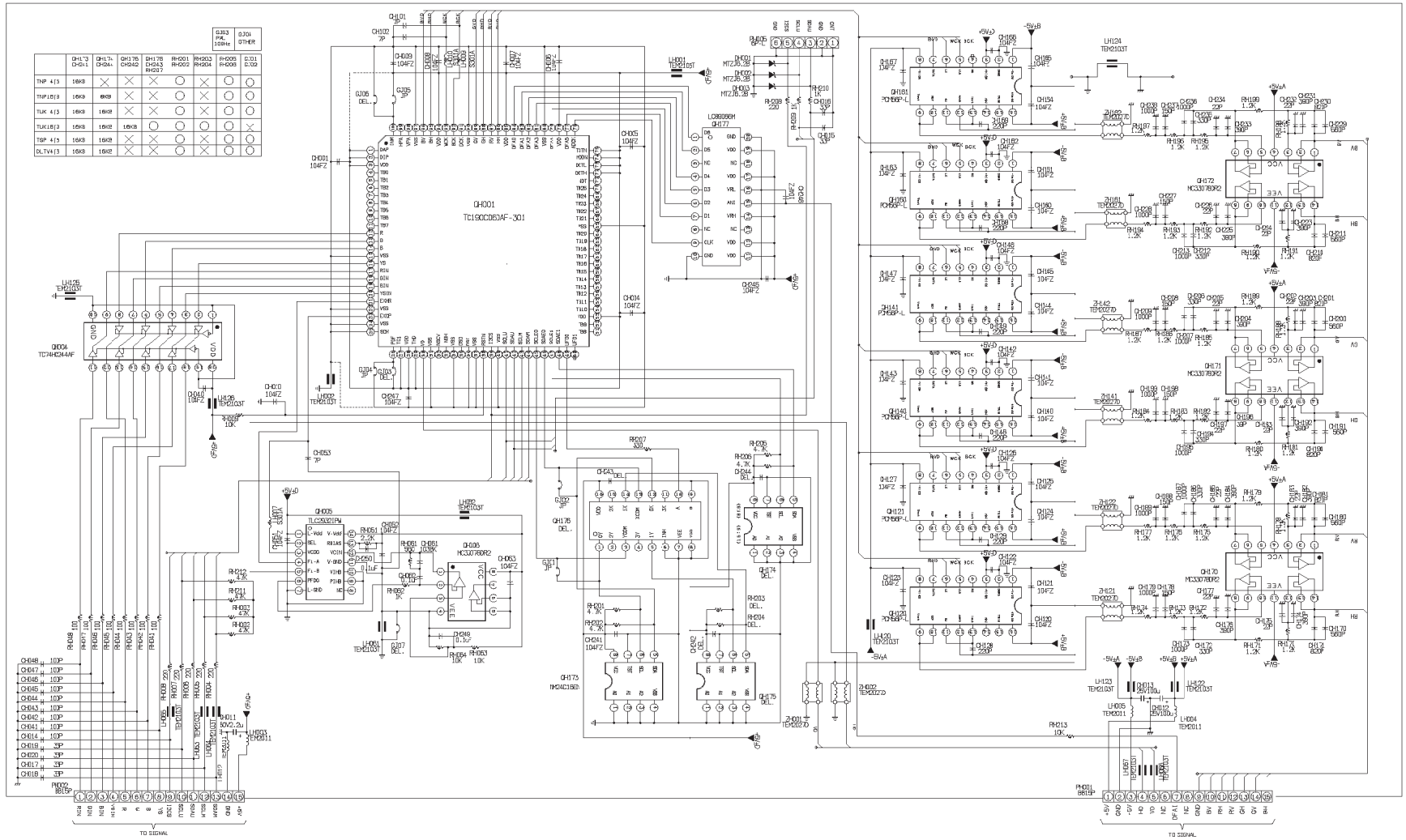
DIGITAL CONVER
56H80/40H80

GJ03 PAL 100Hz	GJ04 OTHER

	QH173 CH241	QH174 CH244	QH175 CH242	QH176 CH243 RH207	RH201 RH202	RH203 RH204	RH205 RH206	GJ01 GJ02
TNP 4|3	16KB	×	×	×	○	×	○	○
TNP16|9	16KB	8KB	×	×	○	×	○	○
TUK 4|3	16KB	16KB	×	×	○	×	○	○
TUK16|9	16KB	16KB	16KB	○	○	○	○	×
TSP 4|3	16KB	16KB	×	×	○	×	○	○
DLTV4|3	16KB	16KB	×	×	○	×	○	○

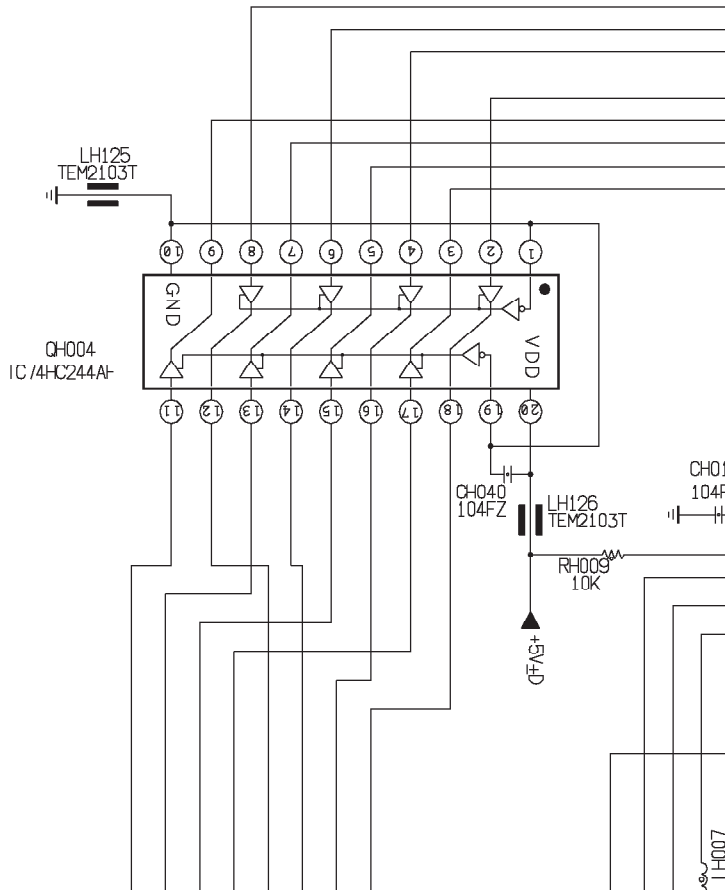

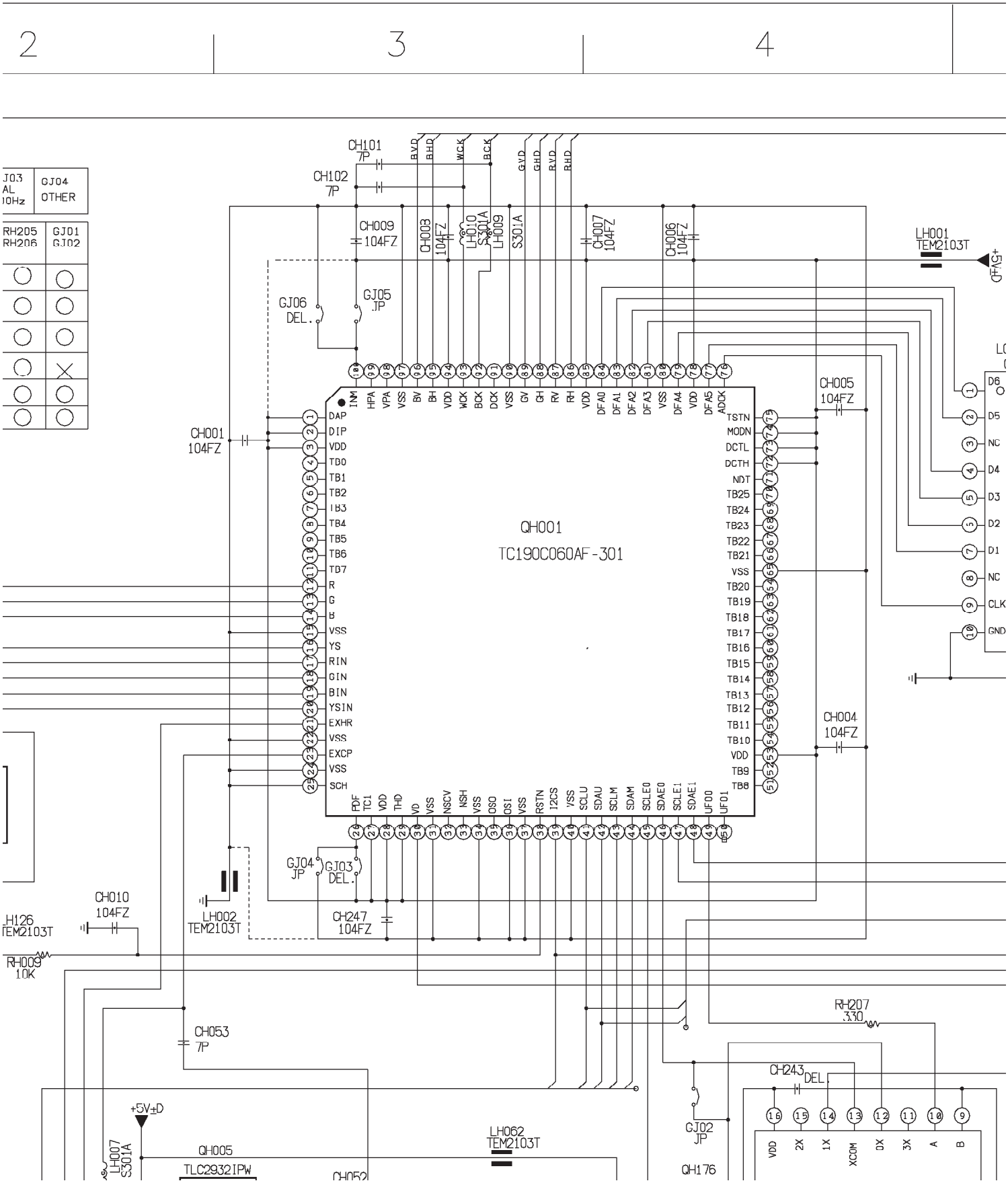
2
3
4
GJ04
OTHER
RH205
RH206
GJ01
GJ02
CH101
7P
CH102
7P
CH009
104FZ
CH003
104FZ
LH010
S301A
LH009
S301A
CH007
104FZ
CH006
104FZ
LH001
TEM2103T
GJ06
DEL.
GJ05
JP
CH001
104FZ
CH005
104FZ
CH004
104FZ
QH001
TC190C060AF-301
GJ04
JP
GJ03
DEL.
CH010
104FZ
LH002
TEM2103T
CH247
104FZ
RH009
10K
CH053
7P
RH207
330
CH243
DEL.
GJ02
JP
QH176
+5V±D
LH007
S301A
QH005
TLC2932IPW
LH062
TEM2103T
CH052

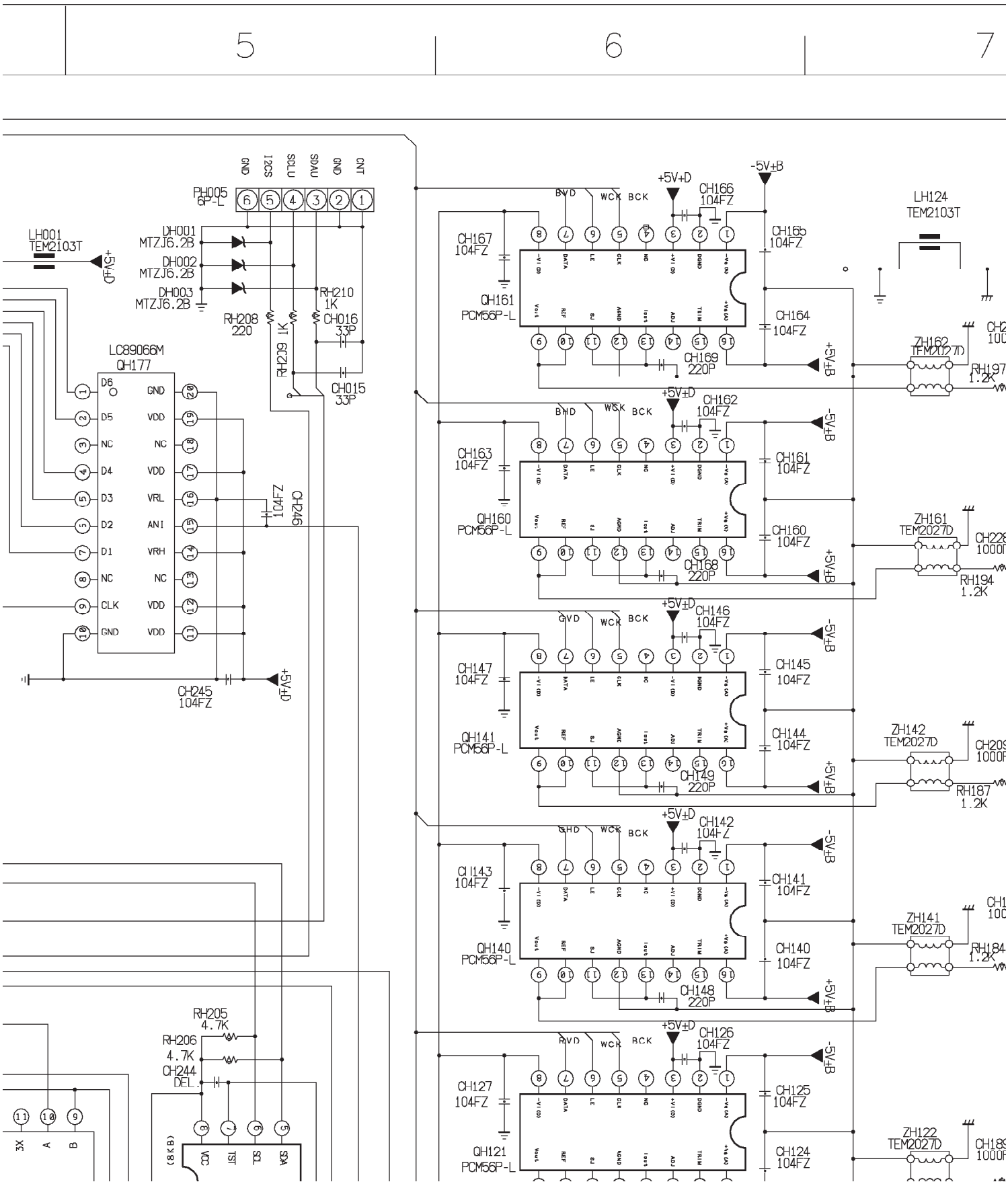
5
6
7
GND
I2CS
SCLU
SDAU
GND
CNT
PH005
6P-L
LH001
TEM2103T
+5V±D
DH001
MTZJ6.2B
DH002
MTZJ6.2B
DH003
MTZJ6.2B
RH210
1K
RH208
220
RH209 1K
CH016
33P
CH015
33P
LC89066M
QH177
D6
D5
NC
D4
D3
D2
D1
NC
CLK
GND
GND
VDD
NC
VDD
VRL
ANI
VRH
NC
VDD
VDD
CH246
104FZ
CH245
104FZ
RH205
4.7K
RH206
4.7K
CH244
DEL.
3X
A
B
VCC
TST
SCL
SDA
(8KB)
+5V±D
-5V±B
CH166
104FZ
CH165
104FZ
CH167
104FZ
QH161
PCM56P-L
CH164
104FZ
CH169
220P
LH124
TEM2103T
ZH162
TEM2027D
RH197
1.2K
CH162
104FZ
CH163
104FZ
QH160
PCM56P-L
CH161
104FZ
CH160
104FZ
CH168
220P
ZH161
TEM2027D
RH194
1.2K
CH146
104FZ
CH147
104FZ
QH141
PCM56P-L
CH145
104FZ
CH144
104FZ
CH149
220P
ZH142
TEM2027D
RH187
1.2K
CH142
104FZ
CH143
104FZ
QH140
PCM56P-L
CH141
104FZ
CH140
104FZ
CH148
220P
ZH141
TEM2027D
RH184
1.2K
CH126
104FZ
CH127
104FZ
QH121
PCM56P-L
CH125
104FZ
CH124
104FZ
ZH122
TEM2027D
BVD
WCK
BCK
GVD
GND
RVD
DATA
LE
CLK
NC
DGND
TRIM
REF
SJ
AGND
ADJ

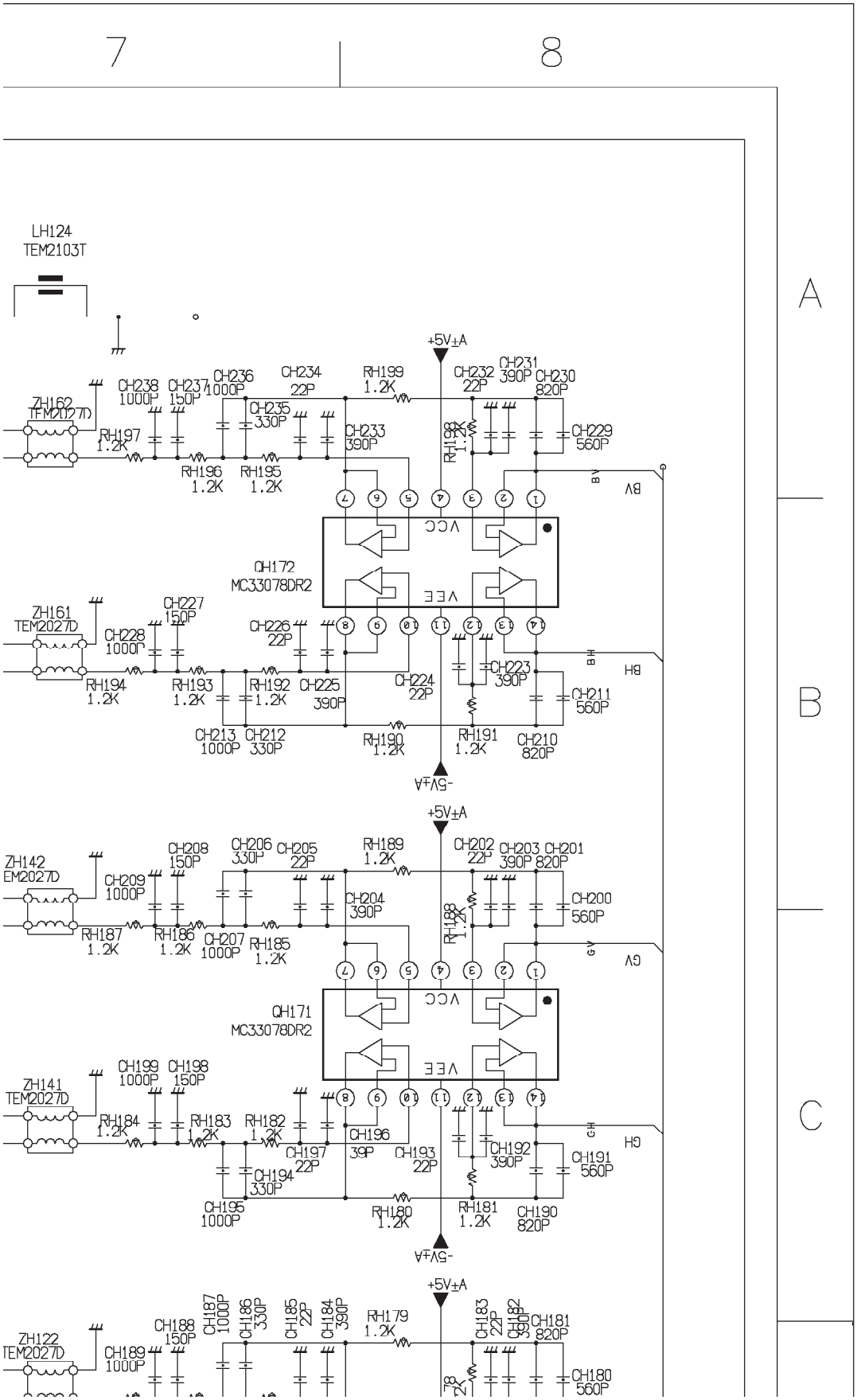
7
8
A
B
C
LH124
TEM2103T
+5V±A
-5V±A
ZH162
TEM2027D
ZH161
TEM2027D
QH172
MC33078DR2
VCC
VEE
BV
BH
ZH142
EM2027D
ZH141
TEM2027D
QH171
MC33078DR2
GV
GH
ZH122
TEM2027D
CH238 1000P
CH237 150P
CH236 1000P
CH234 22P
RH199 1.2K
CH232 22P
CH231 390P
CH230 820P
CH235 330P
CH233 390P
CH229 560P
RH197 1.2K
RH196 1.2K
RH195 1.2K
CH227 150P
CH228 1000P
CH226 22P
CH223 390P
CH224 22P
CH225 390P
CH211 560P
RH194 1.2K
RH193 1.2K
RH192 1.2K
CH213 1000P
CH212 330P
RH190 1.2K
RH191 1.2K
CH210 820P
CH208 150P
CH206 330P
CH205 22P
RH189 1.2K
CH202 22P
CH203 390P
CH201 820P
CH209 1000P
CH204 390P
CH200 560P
RH187 1.2K
RH186 1.2K
CH207 1000P
RH185 1.2K
CH199 1000P
CH198 150P
RH184 1.2K
RH183 1.2K
RH182 1.2K
CH196 39P
CH197 22P
CH193 22P
CH192 390P
CH191 560P
CH194 330P
CH195 1000P
RH180 1.2K
RH181 1.2K
CH190 820P
CH188 150P
CH187 1000P
CH186 330P
CH185 22P
CH184 390P
RH179 1.2K
CH183 22P
CH182 390P
CH181 820P
CH189 1000P
CH180 560P

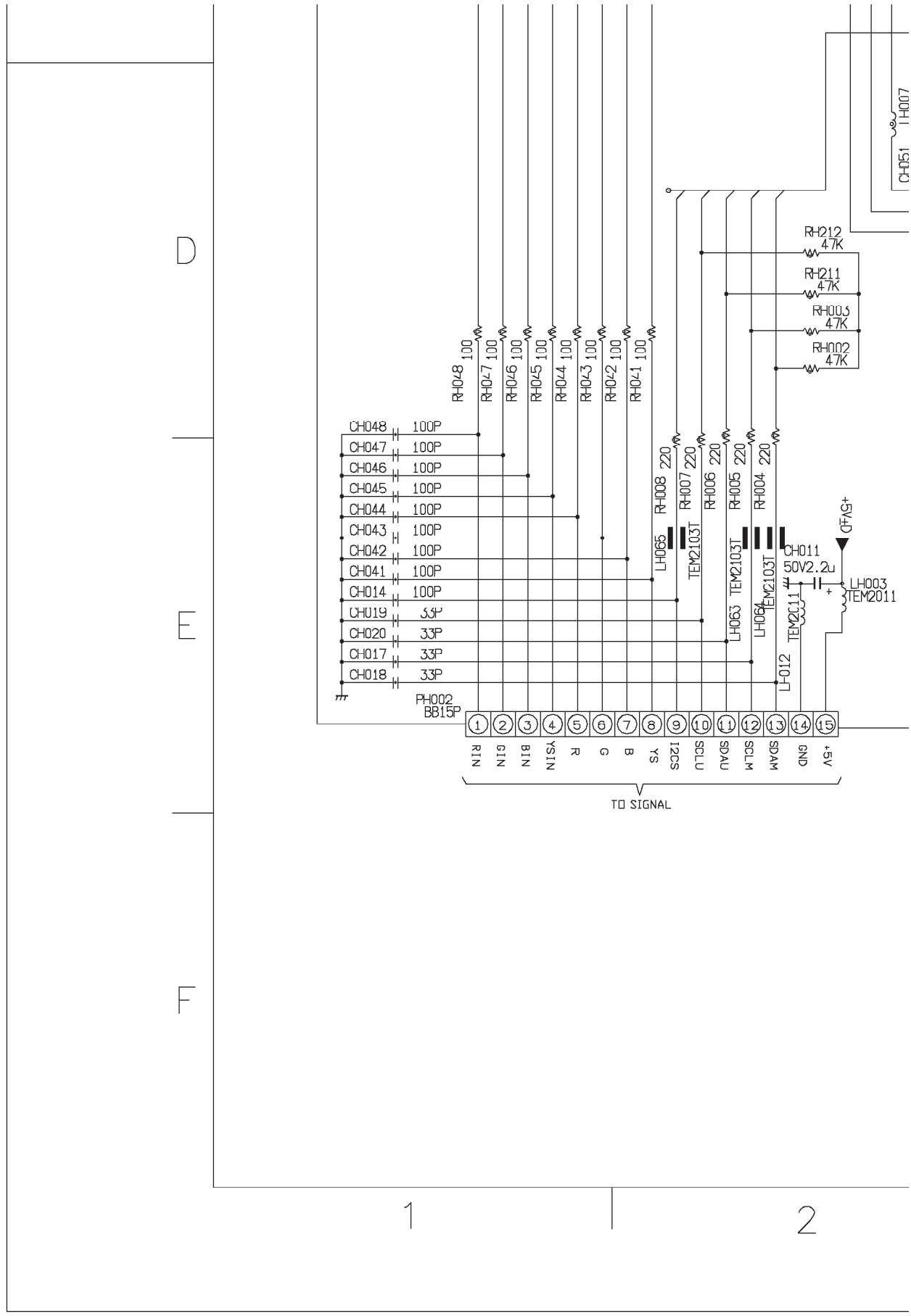

D
E
F
1
2
RH212 47K
RH211 47K
RH003 47K
RH002 47K
RH048 100
RH047 100
RH046 100
RH045 100
RH044 100
RH043 100
RH042 100
RH041 100
CH048 100P
CH047 100P
CH046 100P
CH045 100P
CH044 100P
CH043 100P
CH042 100P
CH041 100P
CH014 100P
CH019 33P
CH020 33P
CH017 33P
CH018 33P
RH008 220
RH007 220
RH006 220
RH005 220
RH004 220
LH065
TEM2103T
LH063
LH064
TEM2103T
TEM2103T
CH011 50V2.2u
TEM2011
LH003
TEM2011
+5V+D
LH012
PH002 BB15P
RIN
GIN
BIN
YSIN
R
G
B
YS
I2CS
SCLU
SDAU
SCLM
SDAM
GND
+5V
TO SIGNAL
CH051
LH007

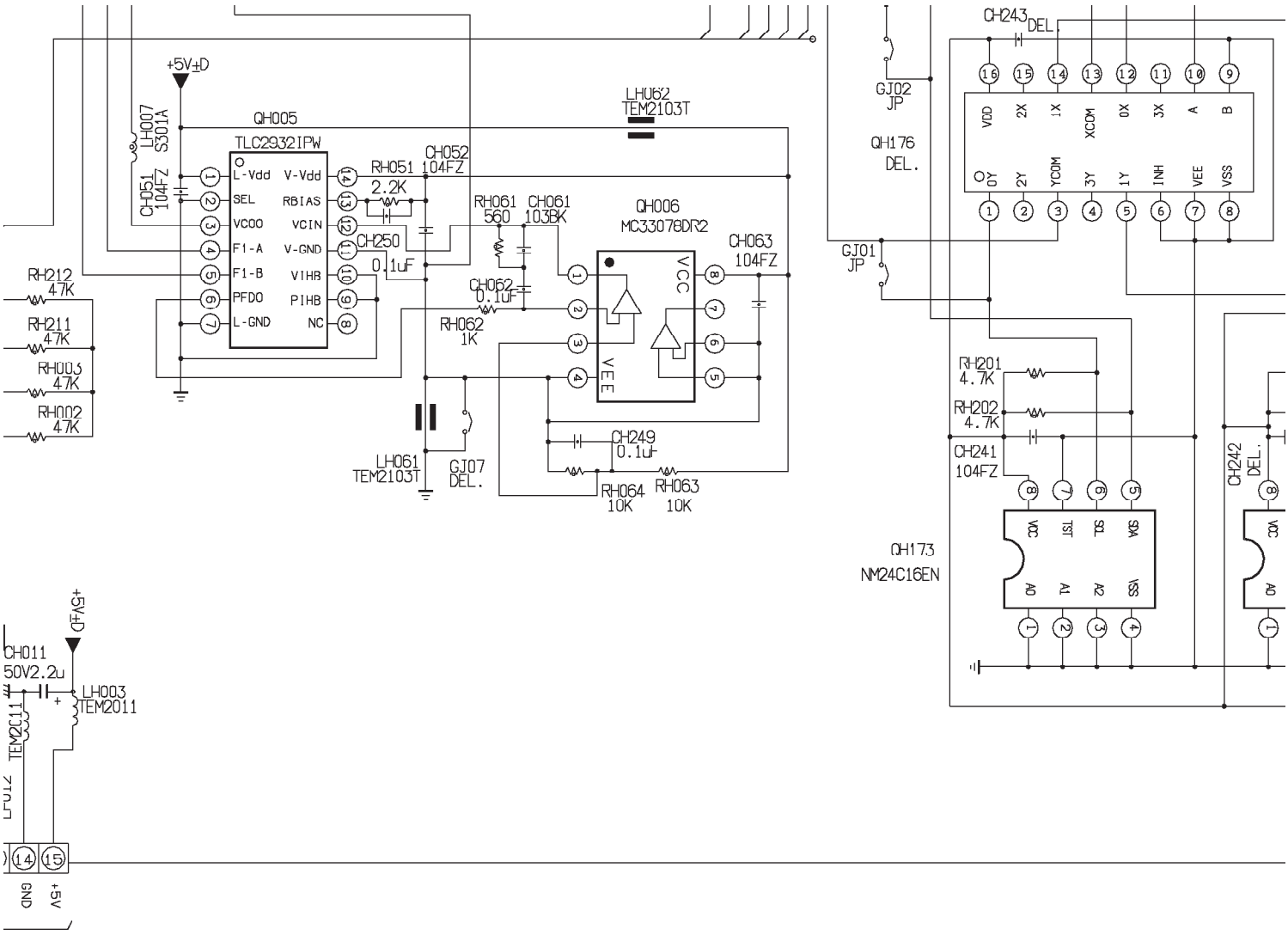
+5V±D
LH007
S301A
CH051
104FZ
QH005
TLC2932IPW
L-Vdd
SEL
VCOO
F1-A
F1-B
PFDO
L-GND
V-Vdd
RBIAS
VCIN
V-GND
VIHB
PIHB
NC
RH051
2.2K
CH052
104FZ
CH250
0.1uF
LH062
TEM2103T
RH061
560
CH061
103BK
QH006
MC33078DR2
VCC
VEE
CH062
0.1uF
RH062
1K
CH063
104FZ
CH249
0.1uF
RH064
10K
RH063
10K
LH061
TEM2103T
GJ07
DEL.
RH212
47K
RH211
47K
RH003
47K
RH002
47K
CH243
DEL.
GJ02
JP
QH176
DEL.
VDD
2X
1X
XCOM
0X
3X
A
B
0Y
2Y
YCOM
3Y
1Y
INH
VEE
VSS
GJ01
JP
RH201
4.7K
RH202
4.7K
CH241
104FZ
CH242
DEL.
QH173
NM24C16EN
VCC
TST
SCL
SDA
A0
A1
A2
VSS
+5V±D
CH011
50V2.2u
LH003
TEM2011
TEM2C11
GND
+5V

2 | 3 | 4

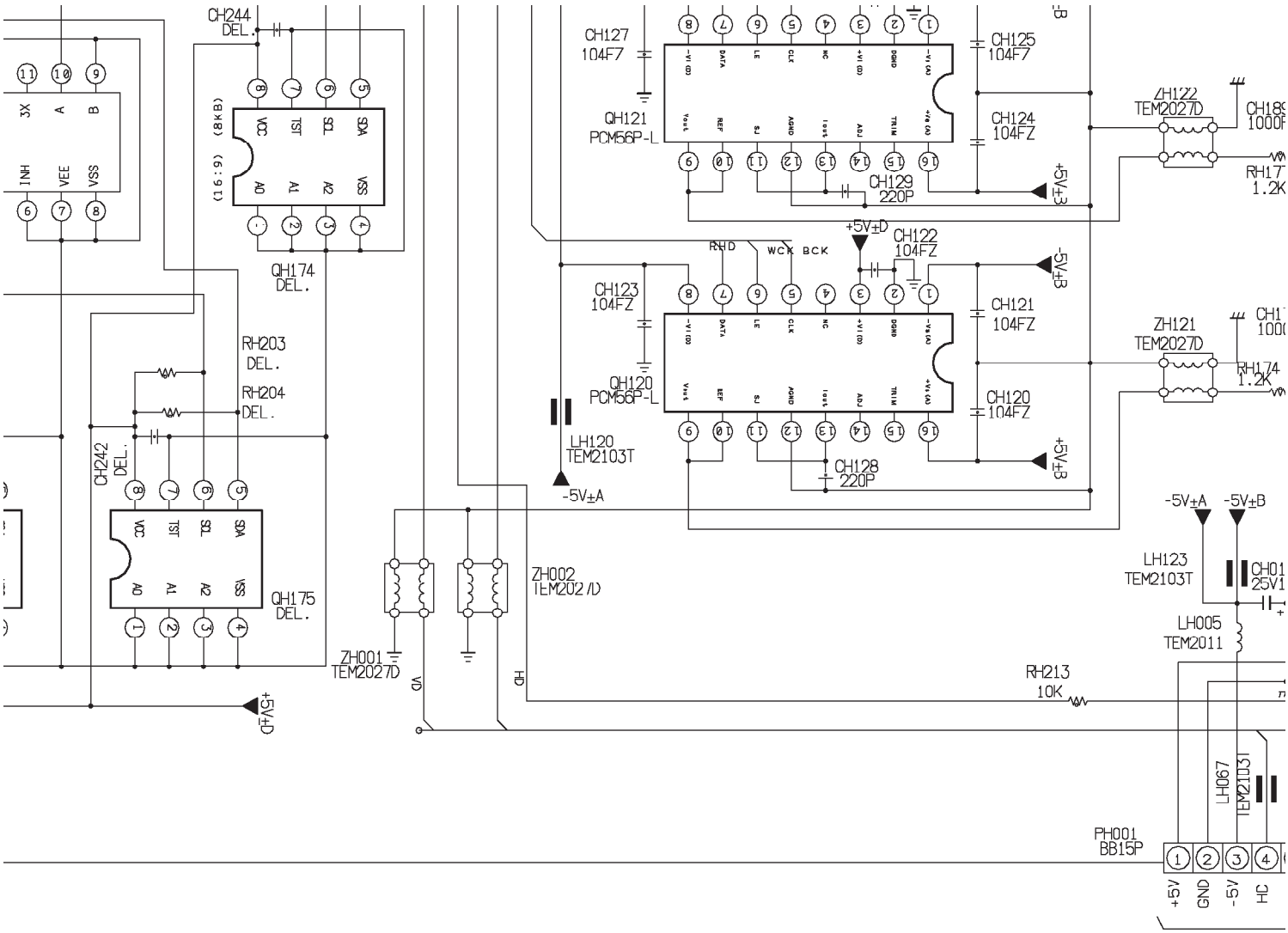
CH244
DEL.
QH174
DEL.
RH203
DEL.
RH204
DEL.
CH242
DEL.
QH175
DEL.
+5V±D
CH127
104F7
QH121
PCM56P-L
CH125
104F7
CH124
104FZ
CH129
220P
+5V±B
ZH122
TEM2027D
RH17
1.2K
+5V±D
RHD
WCK
BCK
CH122
104FZ
CH123
104FZ
QH120
PCM56P-L
CH121
104FZ
CH120
104FZ
CH128
220P
-5V±B
ZH121
TEM2027D
RH174
1.2K
LH120
TEM2103T
-5V±A
ZH002
TEM2027D
ZH001
TEM2027D
VD
HD
-5V±A
-5V±B
LH123
TEM2103T
LH005
TEM2011
RH213
10K
LH067
TEM2103T
PH001
BB15P
+5V
GND
-5V
HC

5 6 7

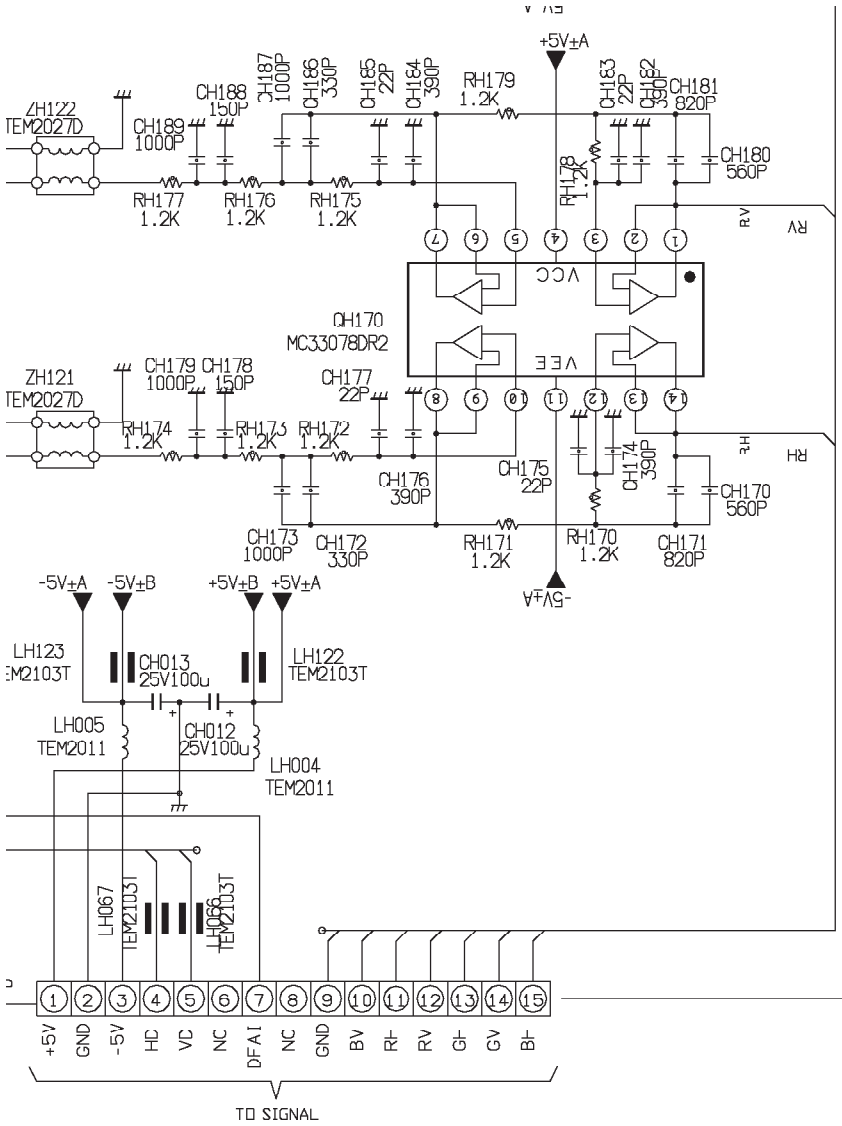

DIGITAL CONVER
56H80/40H80

D

E

F

7

8

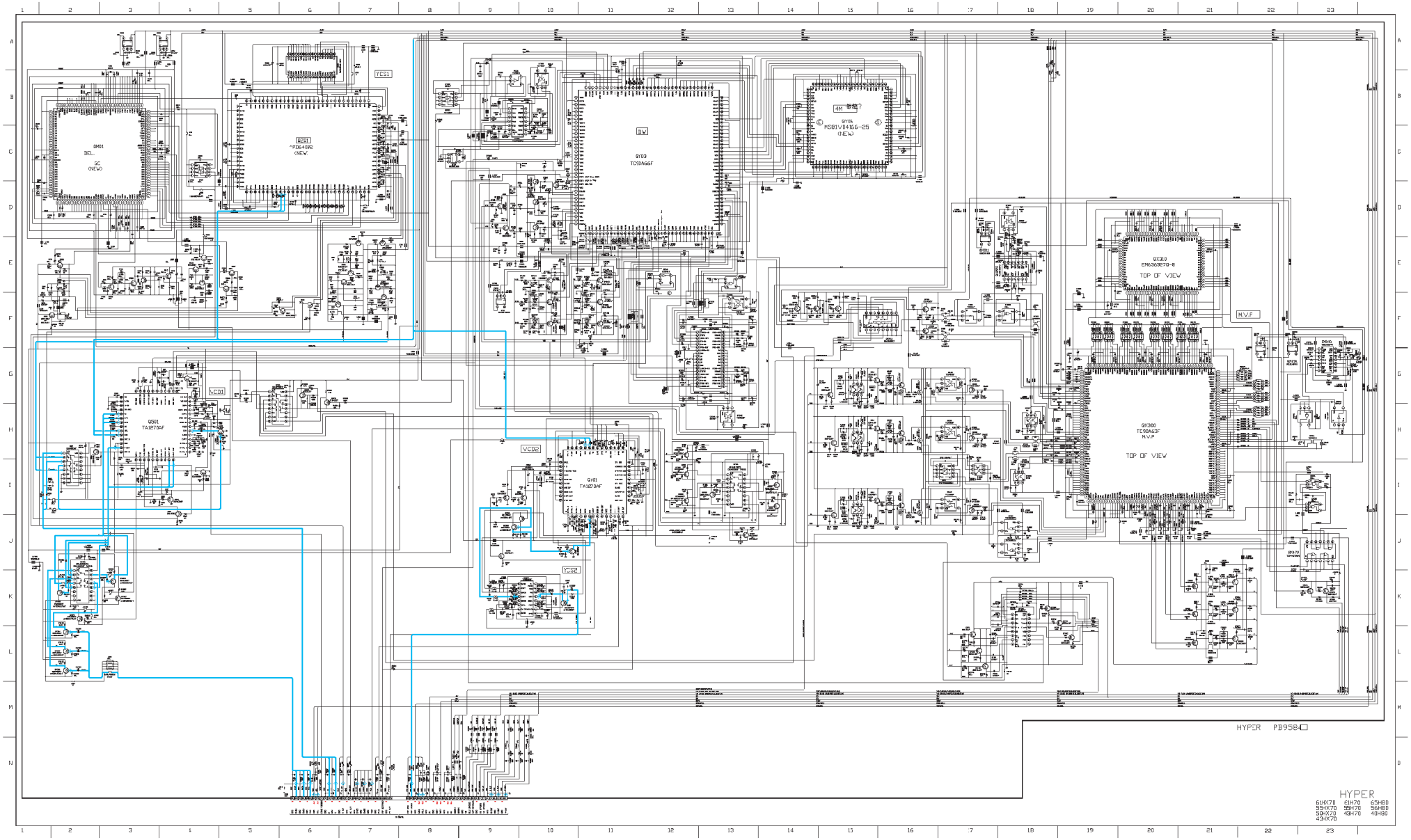

YCS1
QM01
DEL.
SC
(NEW)
QZ01
^PD64092
(NEW)
DW
QY03
TC90A66F
4M 電電?
QY05
KS81V04166-25
(NEW)
QX310
EM6363270-8
TOP OF VIEW
M.V.P
VCD1
QS01
TA1270AF
VCD2
QY01
TA1270AF
YCS2
QX300
TC90A63F
M.V.P
TOP OF VIEW
HYPER PB9584□
HYPER
61HX70 61H70 65H80
55HX70 55H70 56H80
50HX70 43H70 40H80
43HX70

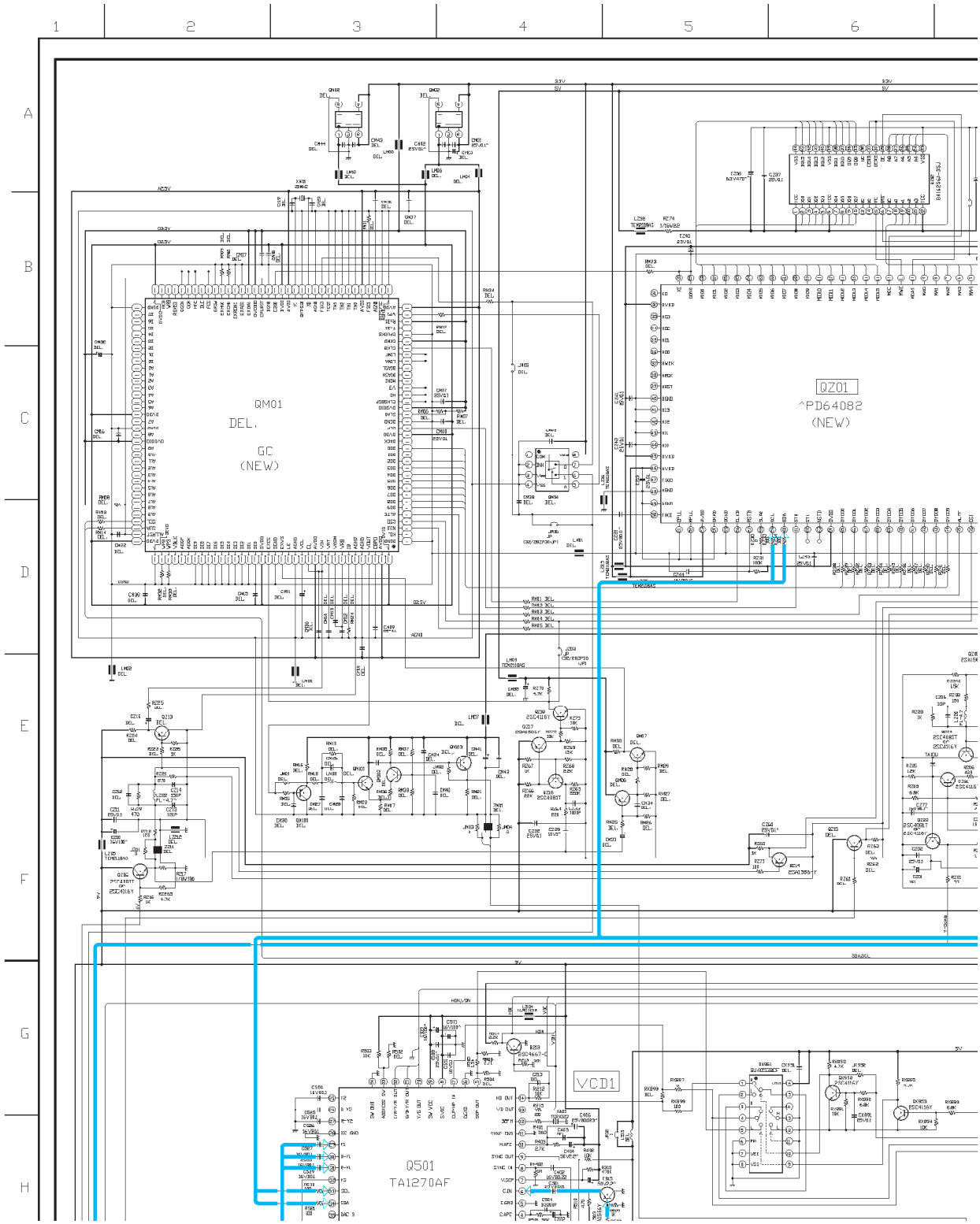
1
2
3
4
5
6
A
B
C
D
E
F
G
H
QM01
DEL.
GC
(NEW)
QZ01
μPD64082
(NEW)
VCD1
Q501
TA1270AF

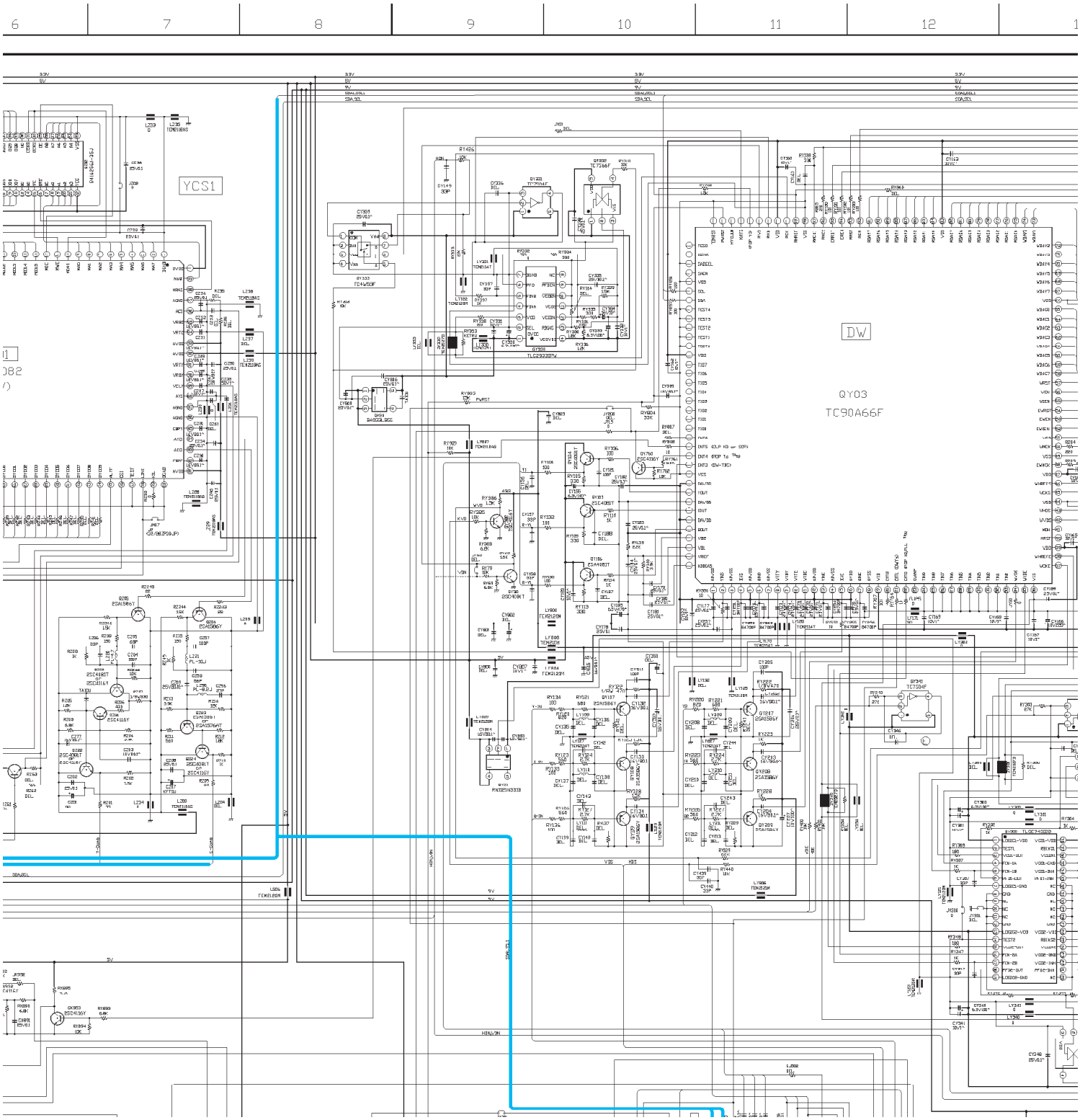
6
7
8
9
10
11
12
YCS1
DW
QY03
TC90A66F

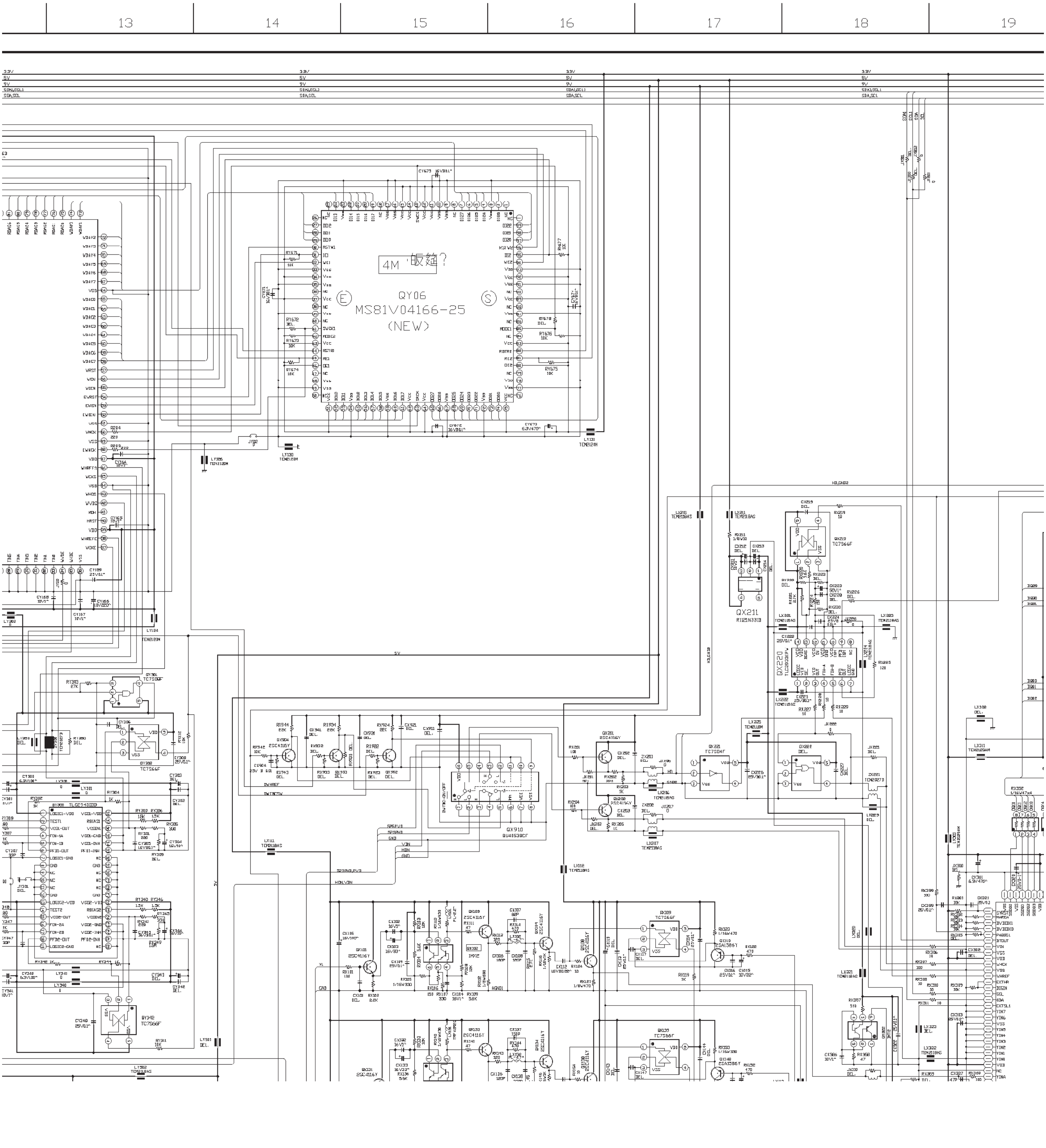
13
14
15
16
17
18
19
QY06
MS81V04166-25
(NEW)
QX910
QX220
QX211

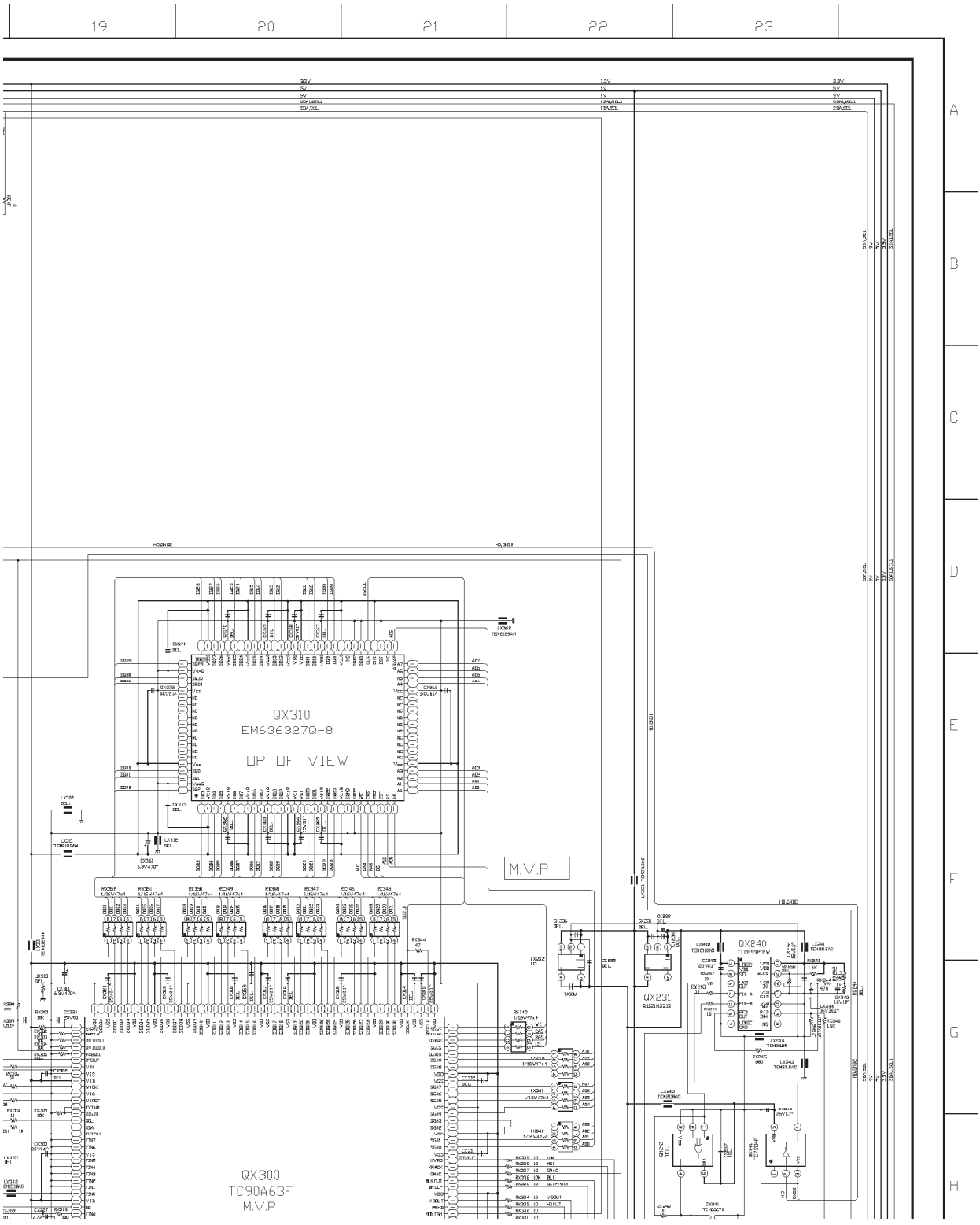
19
20
21
22
23
A
B
C
D
E
F
G
H
QX310
EM636327Q-8
TOP OF VIEW
M.V.P
QX300
TC90A63F
M.V.P
QX240
QX231

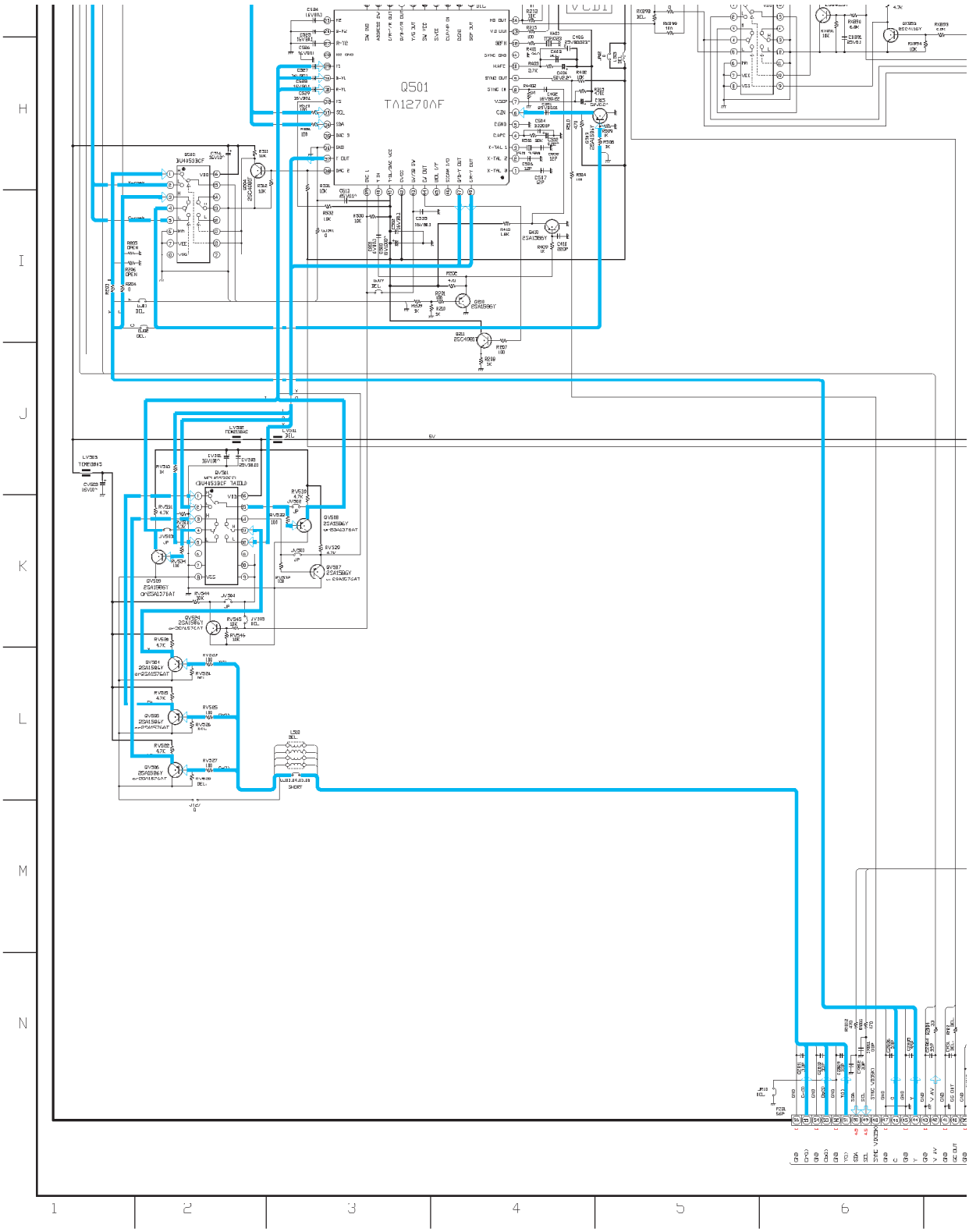
Q501
TA12270AF
H
I
J
K
L
M
N
1
2
3
4
5
6

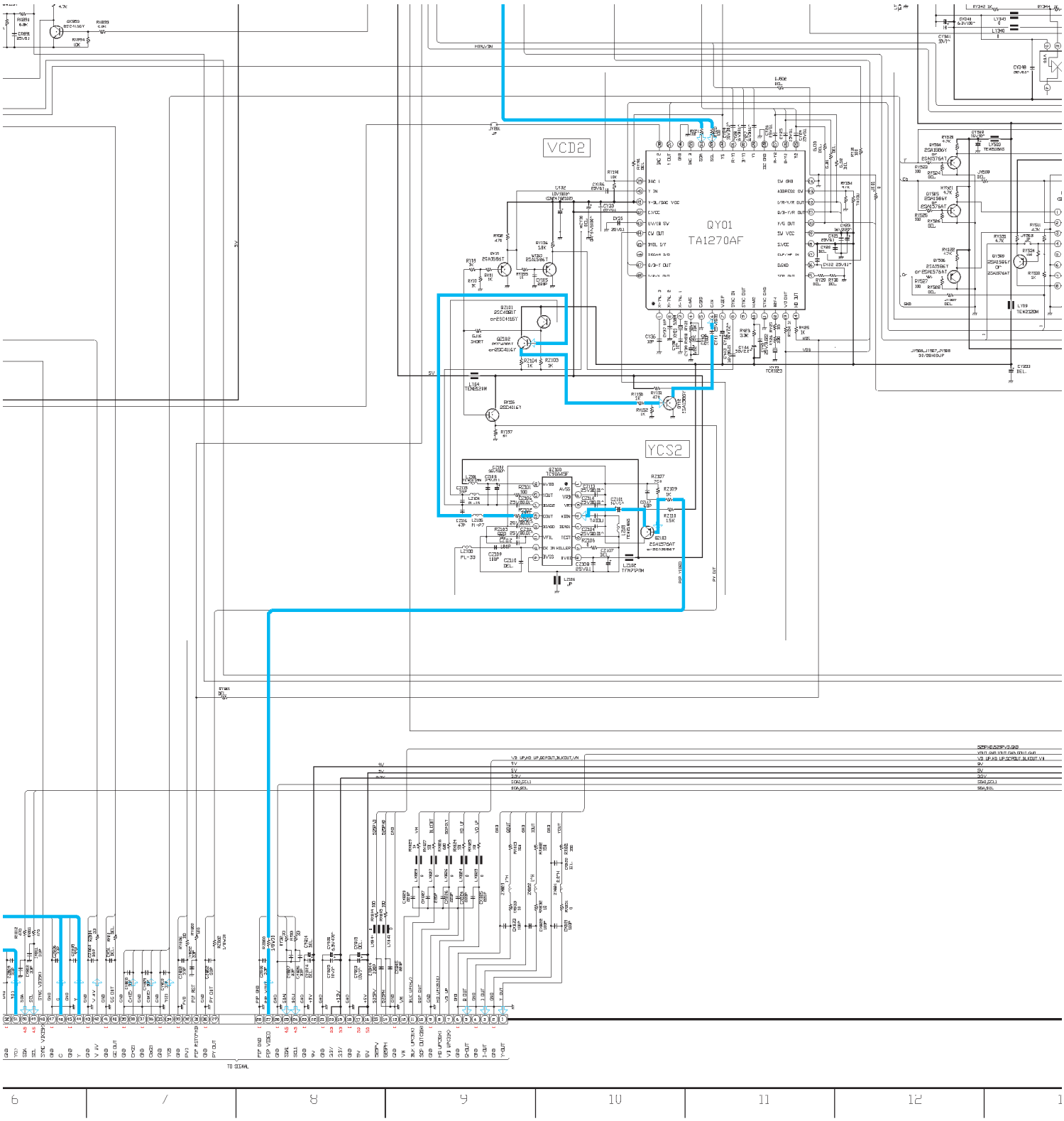
VCD2
QY01
TA1270AF
YCS2
TO SIGNAL
6
7
8
9
10
11
12

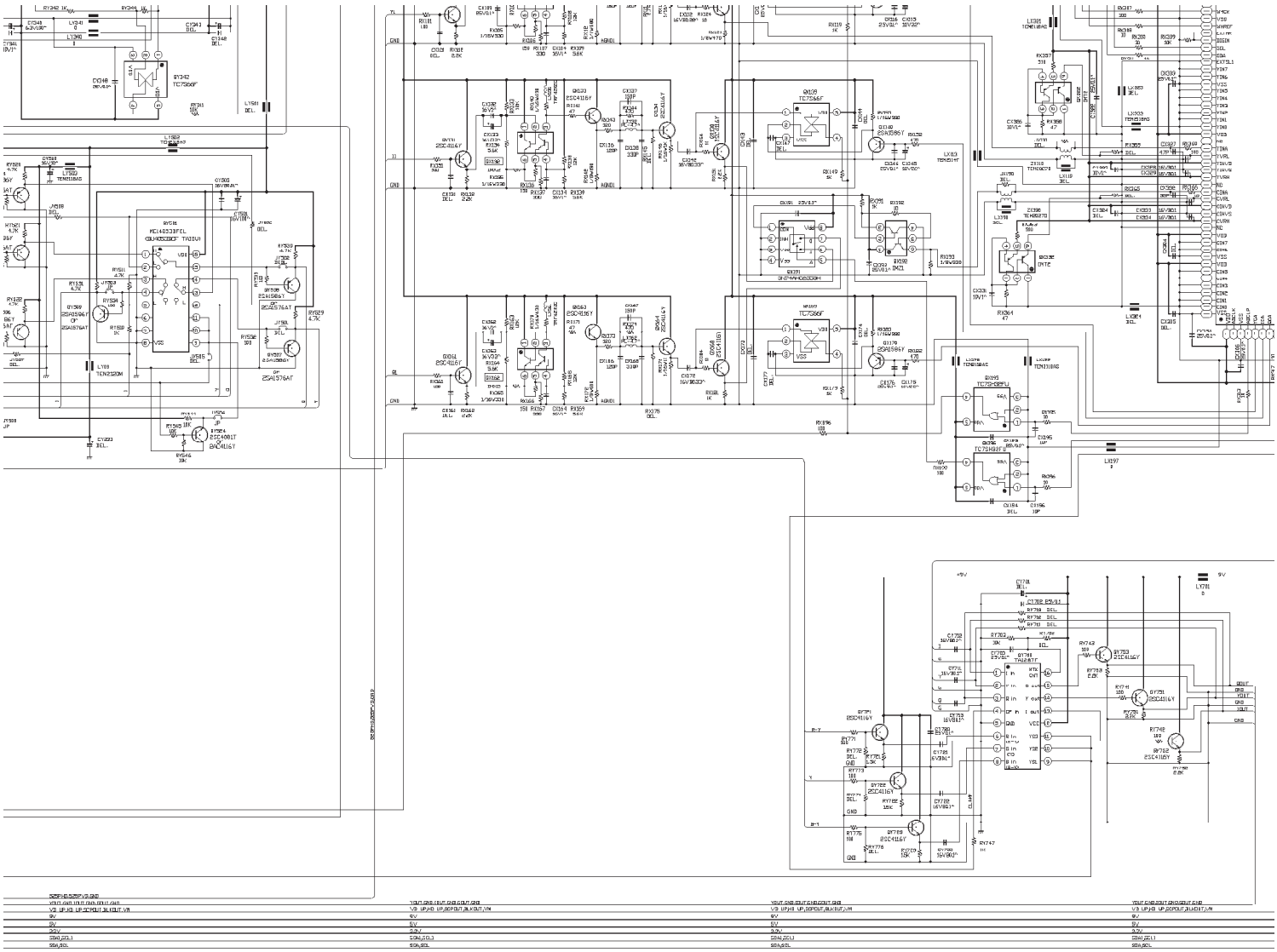

13	14	15	16	17	18	19

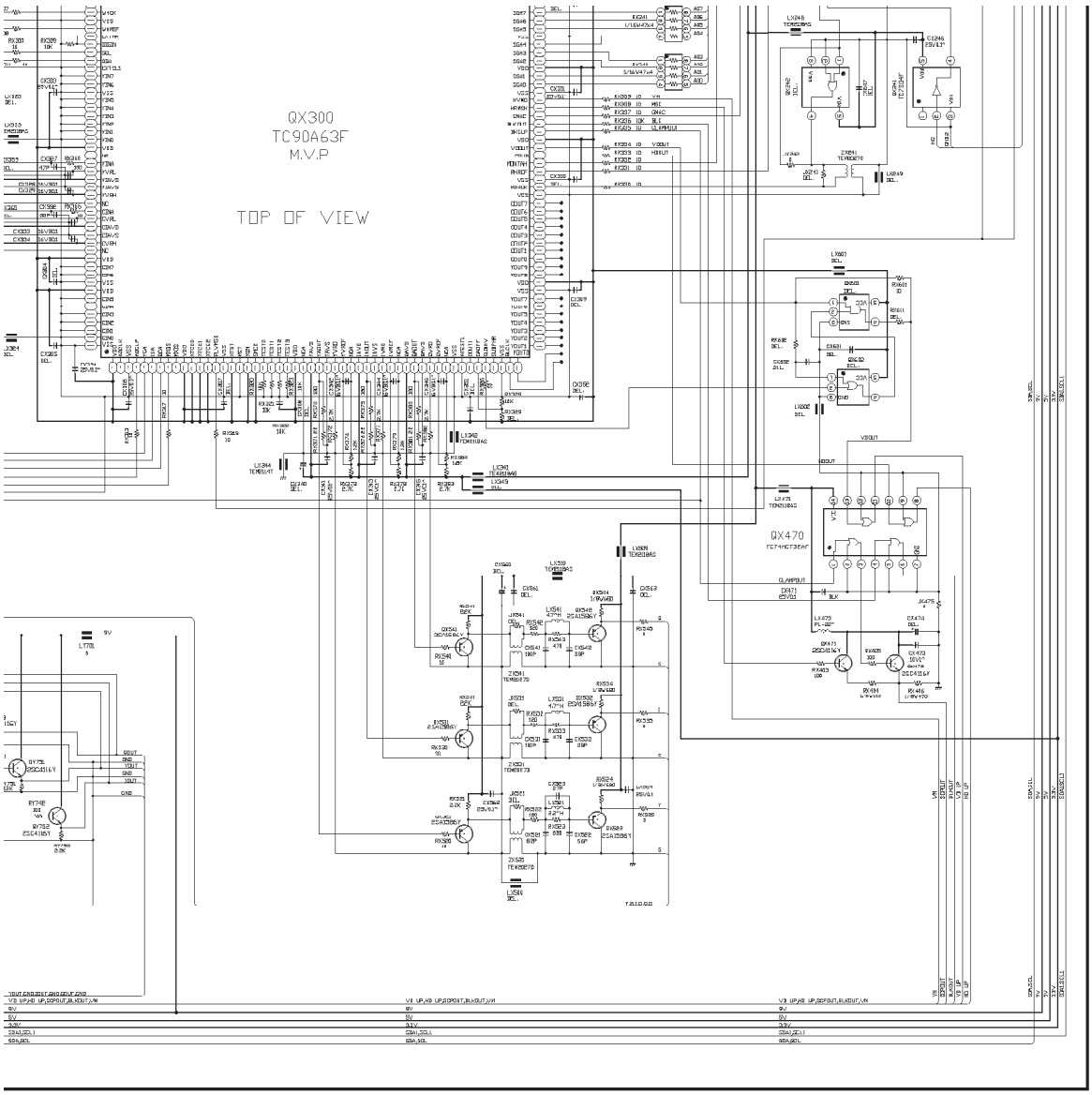

HYPER PB9584□

HYPER

61HX70 61H70 65H80
55HX70 55H70 56H80
50HX70 43H70 40H80
43HX70

19 20 21 22 23